US009477378B2

(12) **United States Patent**
Yang et al.

(10) **Patent No.: US 9,477,378 B2**
(45) **Date of Patent: Oct. 25, 2016**

(54) **METHOD AND APPARATUS FOR PROVIDING A USER INTERFACE**

(71) Applicant: **Samsung Electronics Co., Ltd.**, Gyeonggi-do (KR)

(72) Inventors: **Pil-eun Yang**, Seoul (KR); **Young-jae Ryu**, Gyeonggi-do (KR); **Yoo-ra Oh**, Seoul (KR)

(73) Assignee: **Samsung Electronics Co., Ltd** (KR)

(*) Notice: Subject to any disclaimer, the term of this patent is extended or adjusted under 35 U.S.C. 154(b) by 303 days.

(21) Appl. No.: **13/799,865**

(22) Filed: **Mar. 13, 2013**

(65) **Prior Publication Data**

US 2013/0198643 A1 Aug. 1, 2013

Related U.S. Application Data

(63) Continuation of application No. 13/026,831, filed on Feb. 14, 2011, now Pat. No. 9,116,601.

(30) **Foreign Application Priority Data**

Feb. 12, 2010 (KR) 10-2010-0013602
Feb. 18, 2010 (KR) 10-2010-0014744
Jul. 9, 2010 (KR) 10-2010-0066417

(51) **Int. Cl.**

G06F 3/048	(2013.01)
G06F 3/0482	(2013.01)
G06F 3/0481	(2013.01)
G06F 3/14	(2006.01)
G09G 5/14	(2006.01)

(52) **U.S. Cl.**

CPC ***G06F 3/0482*** (2013.01); ***G06F 3/0481*** (2013.01); ***G06F 3/1423*** (2013.01); *G09G 5/14* (2013.01); *G09G 2370/027* (2013.01)

(58) **Field of Classification Search**

CPC G06F 3/0481; G06F 3/0482; H04M 1/72583
USPC 715/739, 764, 864; 455/566
See application file for complete search history.

(56) **References Cited**

U.S. PATENT DOCUMENTS

2007/0234237	A1	10/2007	Seemann	
2007/0256029	A1	11/2007	Maxwell	
2008/0163053	A1	7/2008	Hwang et al.	
2008/0201647	A1	8/2008	Lagerstedt et al.	
2008/0244681	A1*	10/2008	Gossweiler	H04N 21/235 725/133
2009/0049412	A1	2/2009	Lee et al.	

(Continued)

FOREIGN PATENT DOCUMENTS

KR	1020080061708	7/2008
KR	1020090017892	2/2009
KR	1020110040087	4/2011

OTHER PUBLICATIONS

Korean Office Action dated Aug. 26, 2016 issued in counterpart application No. 10-2010-0066417, 9 pages.

Primary Examiner — Haoshian Shih
(74) *Attorney, Agent, or Firm* — The Farrell Law Firm, P.C.

(57) **ABSTRACT**

A method and apparatus for providing a user interface, at a device, is provided. The method includes displaying a first user interface associated with a specific user; receiving a selection of the first user interface; and displaying a communication function list for connecting with the specific user.

10 Claims, 21 Drawing Sheets

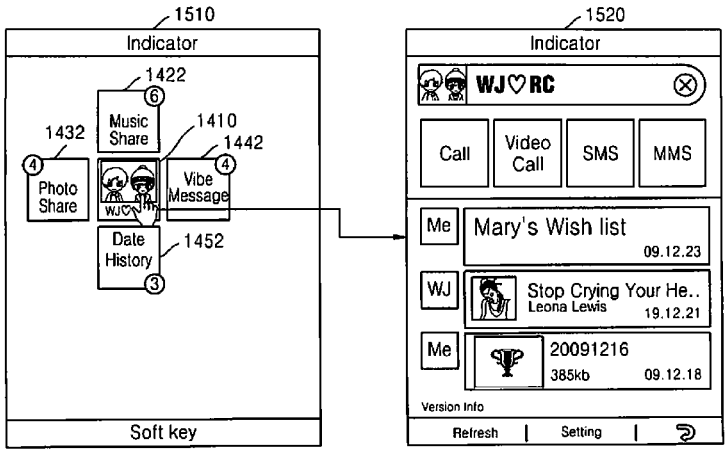

(56) **References Cited**

U.S. PATENT DOCUMENTS

2009/0132378	A1	5/2009	Othmer et al.	
2009/0150910	A1	6/2009	Lyndersay et al.	
2009/0271724	A1	10/2009	Chaudhri et al.	
2009/0327900	A1	12/2009	Noll et al.	
2010/0004008	A1*	1/2010	Abolrous	H04L 51/063 455/466
2010/0070928	A1	3/2010	Goodger et al.	
2010/0087230	A1*	4/2010	Peh et al.	455/566
2011/0167350	A1	7/2011	Hoellwarth	
2011/0191314	A1	8/2011	Howes et al.	

* cited by examiner

FIG. 1A

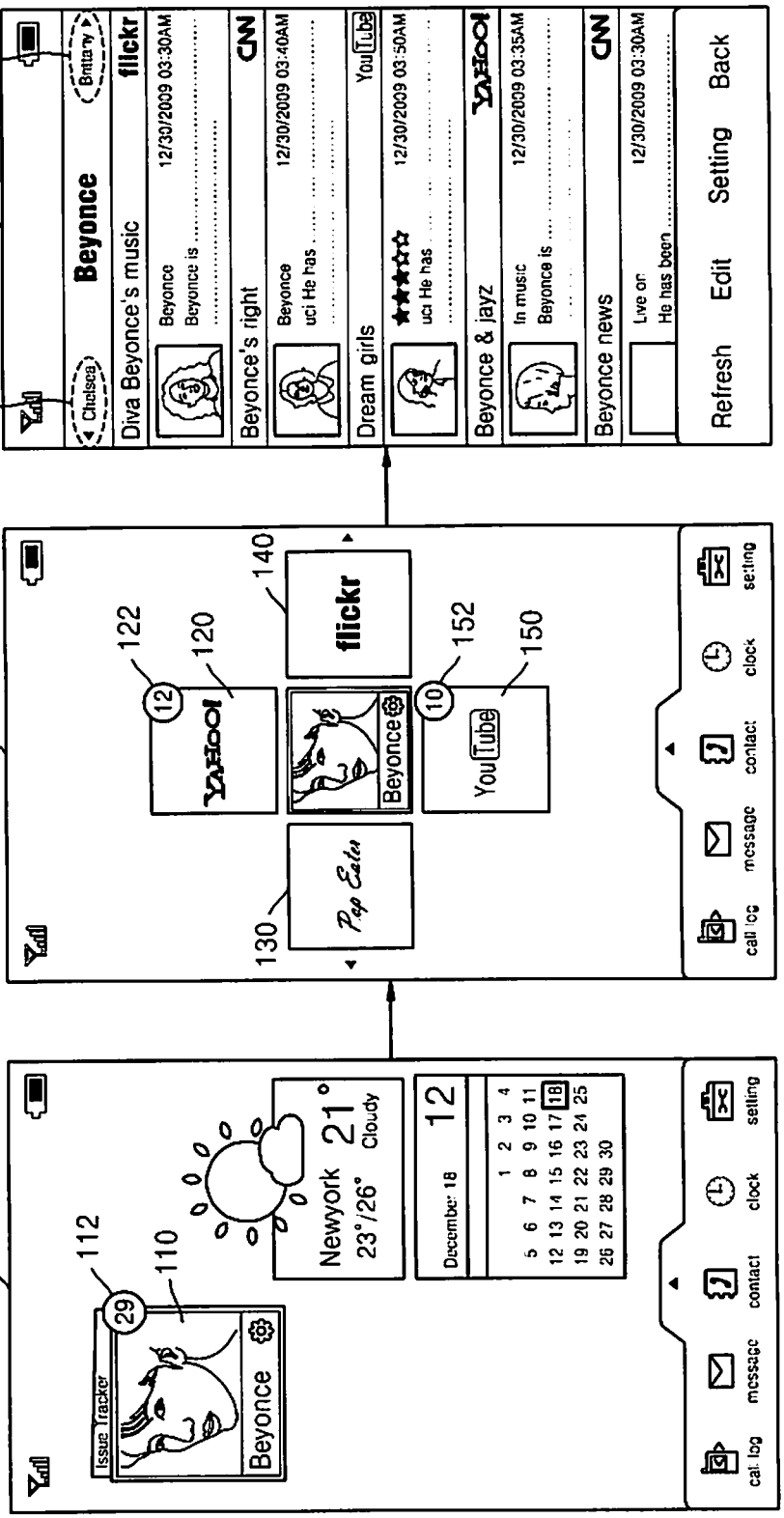
100
102
104
110
112
120
122
130
140
150
152
160
162
Issue Tracker
Beyonce
Newyork
21°
23°/26°
Cloudy
December 18
12
call log
message
contact
clock
setting
Pop Eater
YAHOO!
flickr
YouTube
Chelsea
Brittany
Diva Beyonce's music
Beyonce's right
Dream girls
Beyonce & jayz
Beyonce news
Refresh
Edit
Setting
Back

FIG. 1B

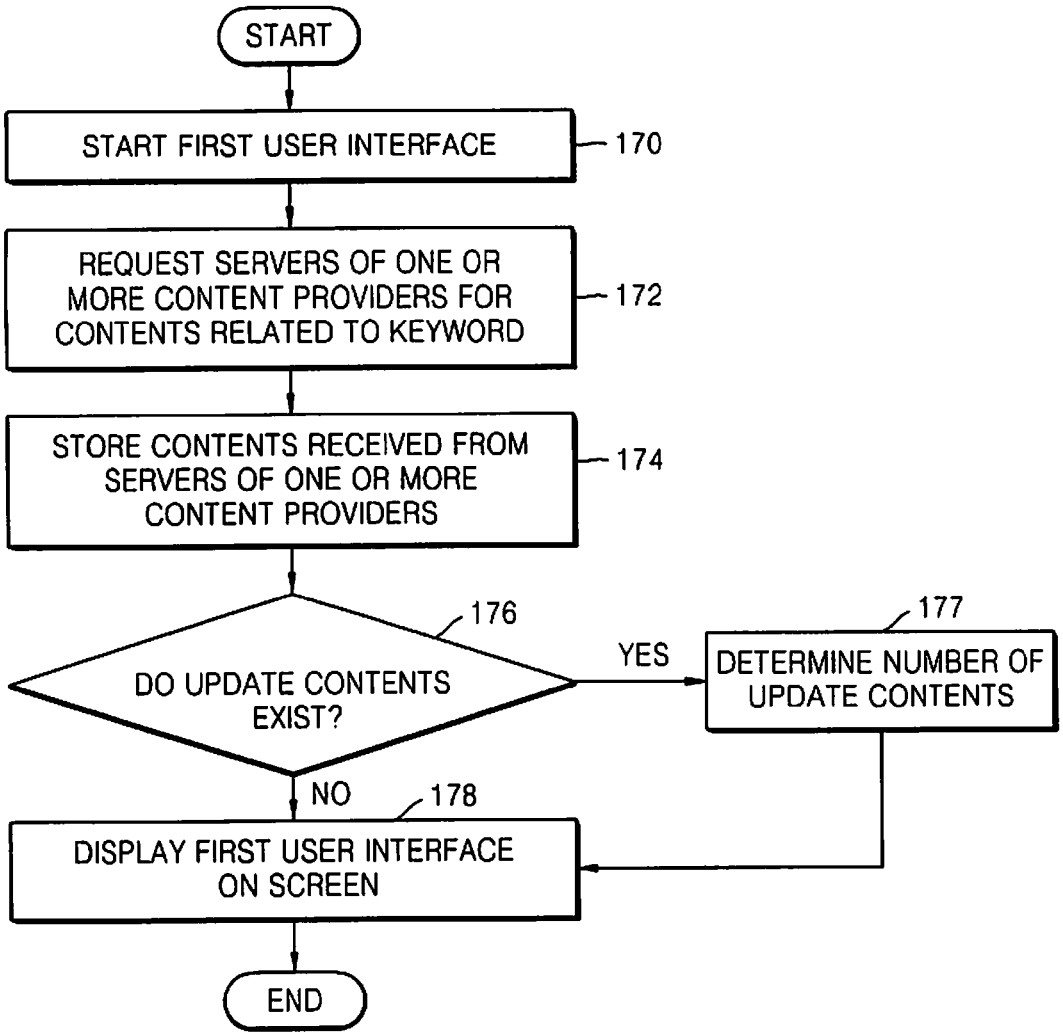
START
START FIRST USER INTERFACE
170
REQUEST SERVERS OF ONE OR MORE CONTENT PROVIDERS FOR CONTENTS RELATED TO KEYWORD
172
STORE CONTENTS RECEIVED FROM SERVERS OF ONE OR MORE CONTENT PROVIDERS
174
DO UPDATE CONTENTS EXIST?
176
YES
DETERMINE NUMBER OF UPDATE CONTENTS
177
NO
178
DISPLAY FIRST USER INTERFACE ON SCREEN
END

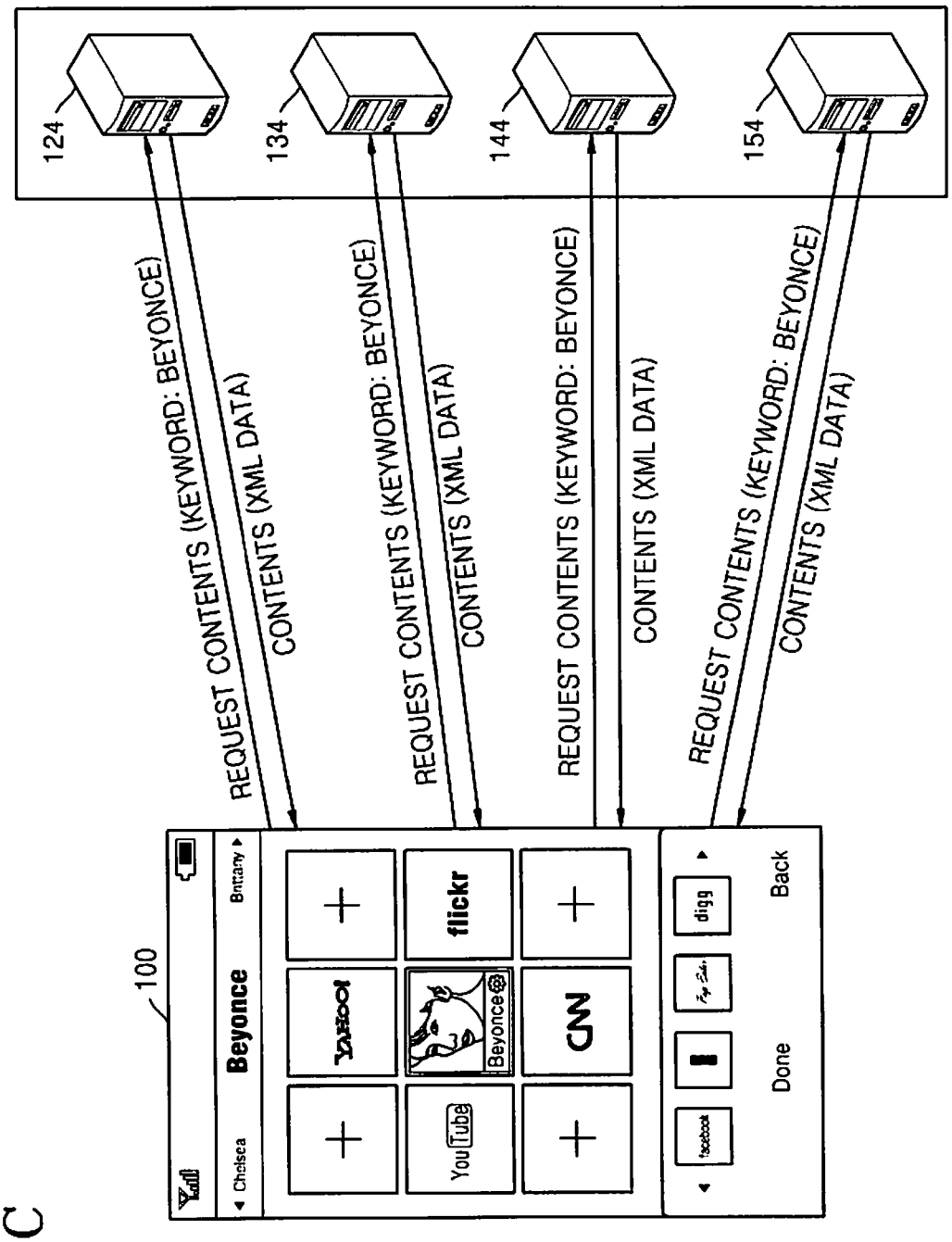
124
134
144
154
REQUEST CONTENTS (KEYWORD: BEYONCE)
CONTENTS (XML DATA)
REQUEST CONTENTS (KEYWORD: BEYONCE)
CONTENTS (XML DATA)
REQUEST CONTENTS (KEYWORD: BEYONCE)
CONTENTS (XML DATA)
REQUEST CONTENTS (KEYWORD: BEYONCE)
CONTENTS (XML DATA)
100
Beyonce
Chelsea
Brittany
flickr
YouTube
CNN
digg
facebook
Done
Back

FIG. 1C

FIG. 1D

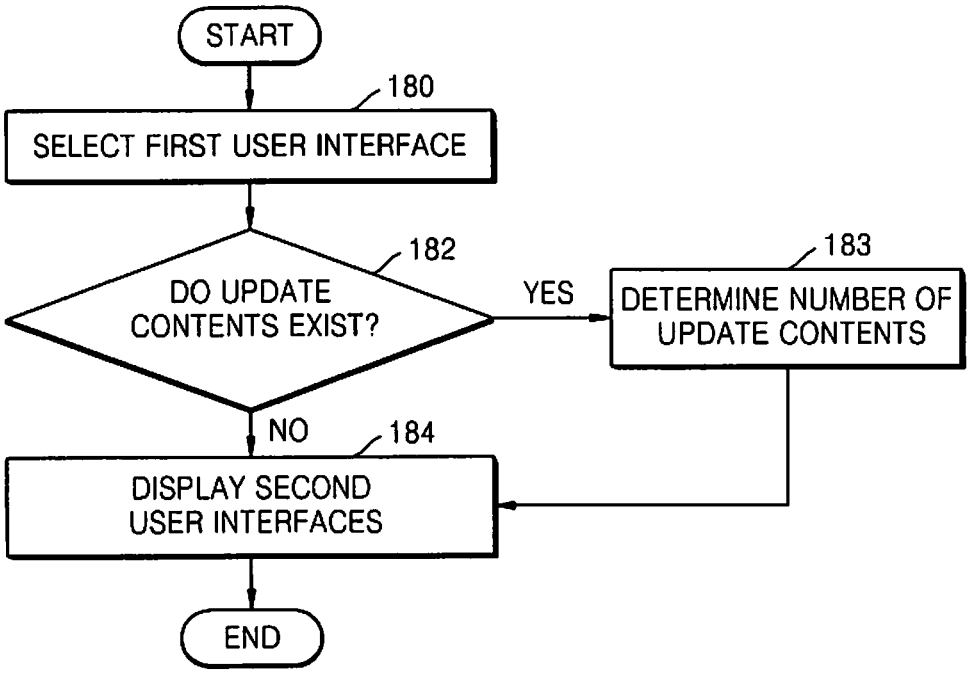
START
180
SELECT FIRST USER INTERFACE
182
DO UPDATE CONTENTS EXIST?
YES
183
DETERMINE NUMBER OF UPDATE CONTENTS
NO
184
DISPLAY SECOND USER INTERFACES
END

FIG. 1E

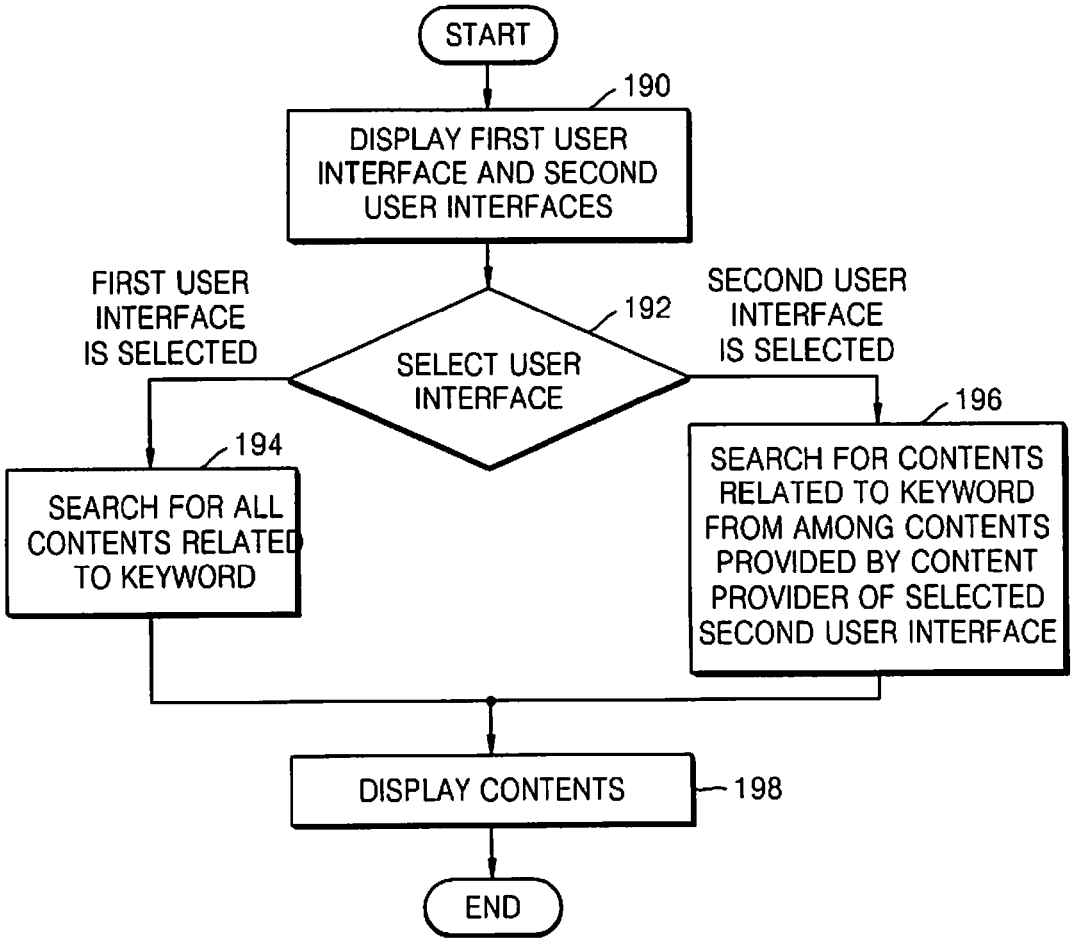
START
190
DISPLAY FIRST USER INTERFACE AND SECOND USER INTERFACES
FIRST USER INTERFACE IS SELECTED
192
SELECT USER INTERFACE
SECOND USER INTERFACE IS SELECTED
194
SEARCH FOR ALL CONTENTS RELATED TO KEYWORD
196
SEARCH FOR CONTENTS RELATED TO KEYWORD FROM AMONG CONTENTS PROVIDED BY CONTENT PROVIDER OF SELECTED SECOND USER INTERFACE
DISPLAY CONTENTS
198
END

FIG. 2

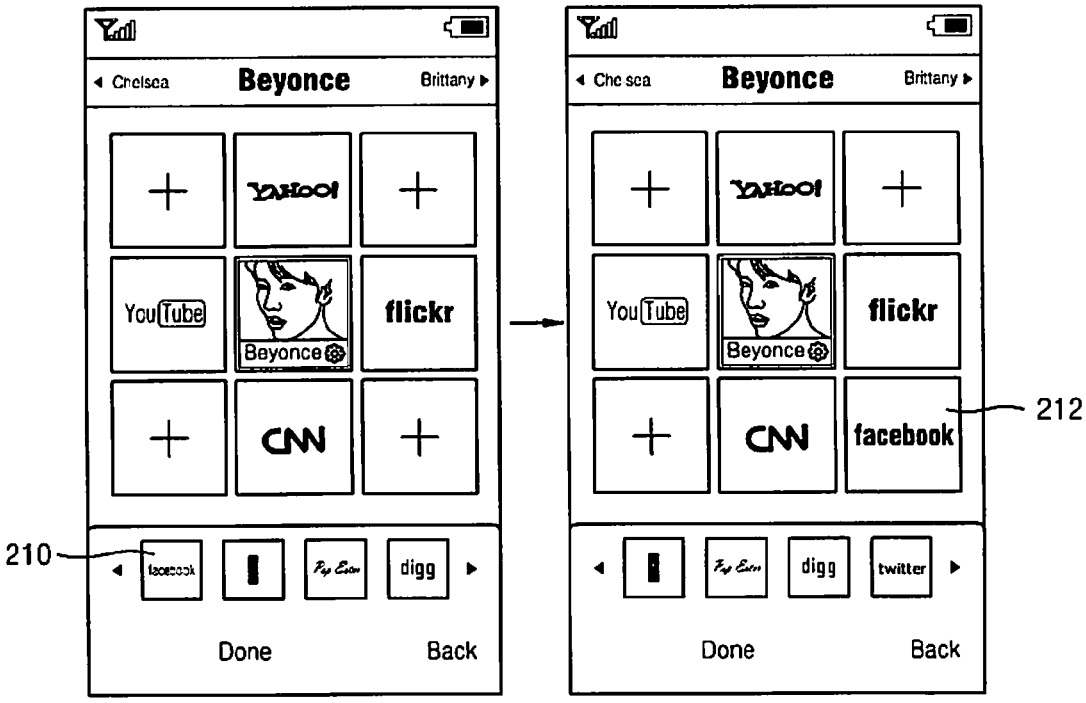
Chelsea
Beyonce
Brittany
YouTube
flickr
CNN
facebook
digg
twitter
Done
Back
210
212

FIG. 3

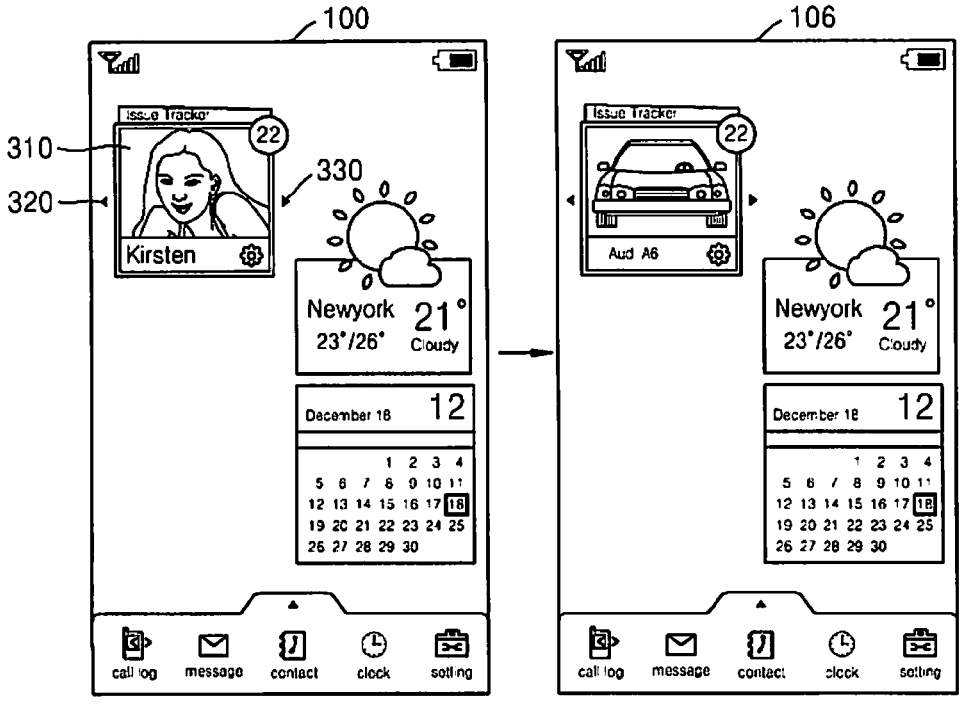
100
106
310
320
330
Kirsten
Aud A6
Newyork
21°
23°/26°
Cloudy
December 18
12
call log
message
contact
clock
setting

FIG. 4A

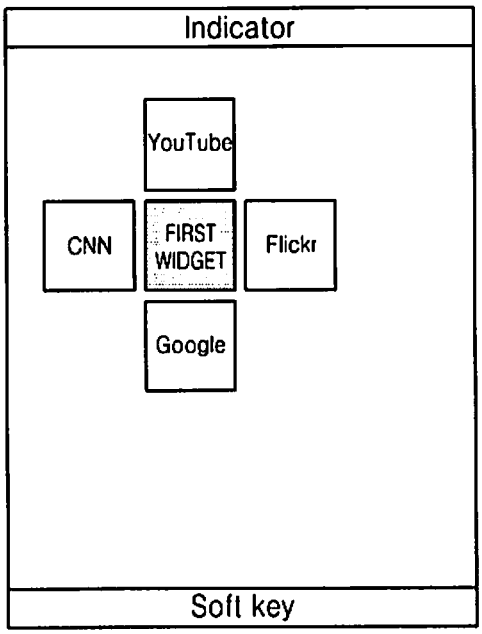
Indicator
YouTube
CNN
FIRST WIDGET
Flickr
Google
Soft key

FIG. 4B

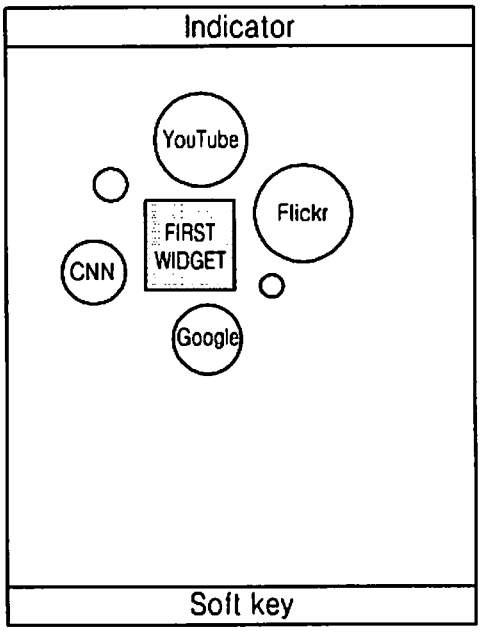
Indicator
YouTube
Flickr
FIRST WIDGET
CNN
Google
Soft key

FIG. 4C

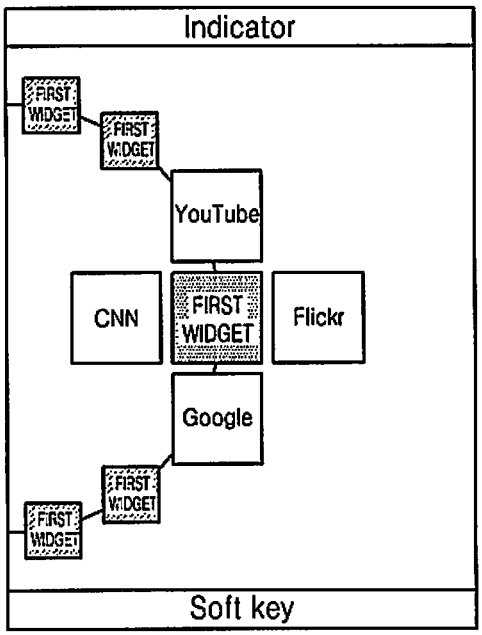
Indicator
FIRST WIDGET
FIRST WIDGET
YouTube
CNN
FIRST WIDGET
Flickr
Google
FIRST WIDGET
FIRST WIDGET
Soft key

FIG. 5

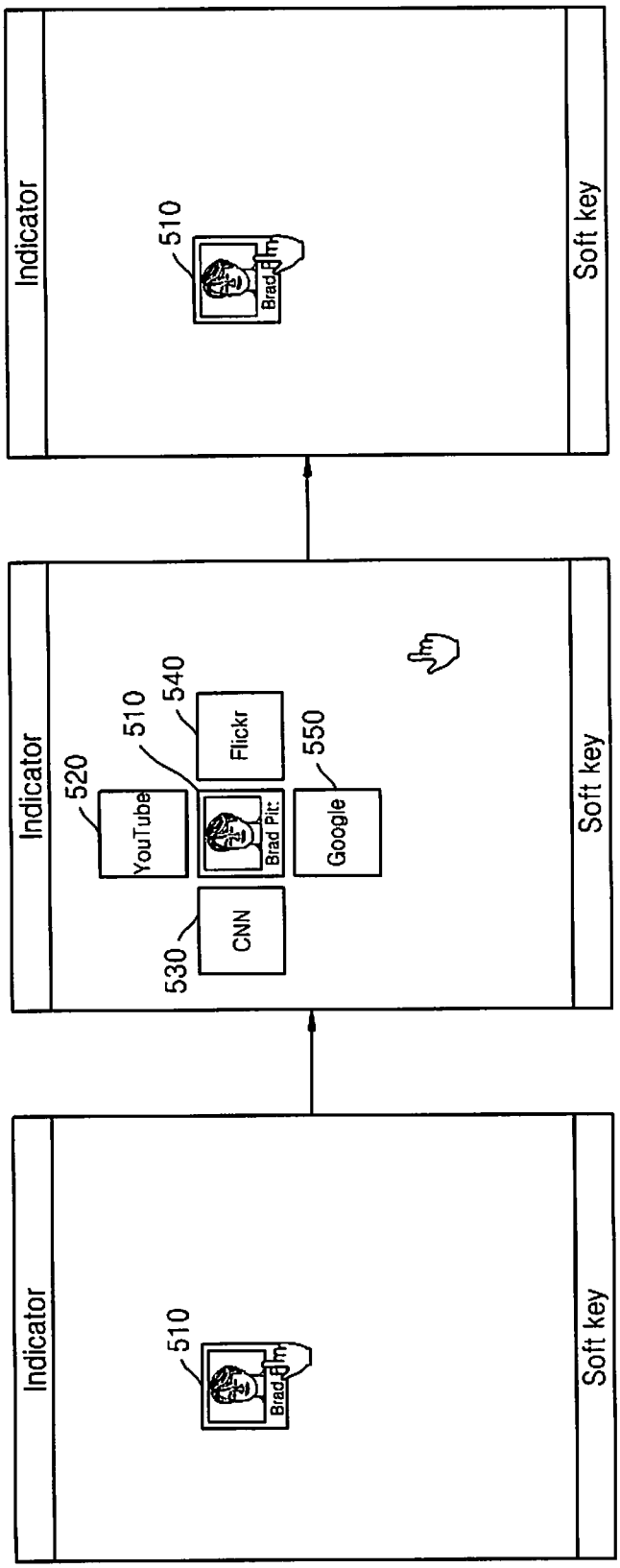
Indicator
Soft key
510
Brad Pitt
Indicator
Soft key
520
YouTube
510
540
Flickr
550
Google
Brad Pitt
530
CNN
Indicator
Soft key
510
Brad Pitt

FIG. 6A

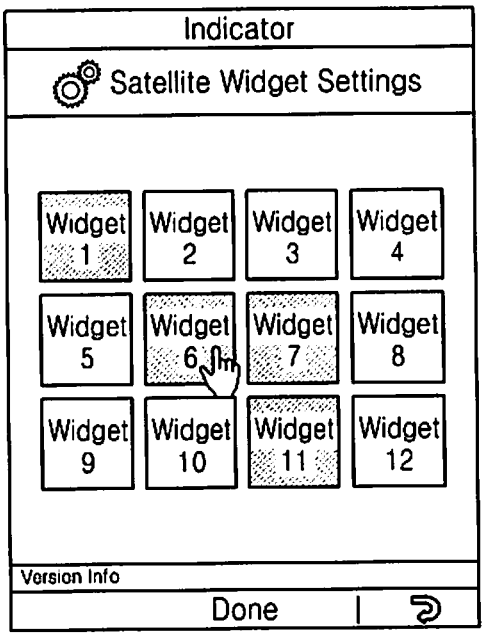
Indicator
Satellite Widget Settings
Widget 1
Widget 2
Widget 3
Widget 4
Widget 5
Widget 6
Widget 7
Widget 8
Widget 9
Widget 10
Widget 11
Widget 12
Version Info
Done

FIG. 6B

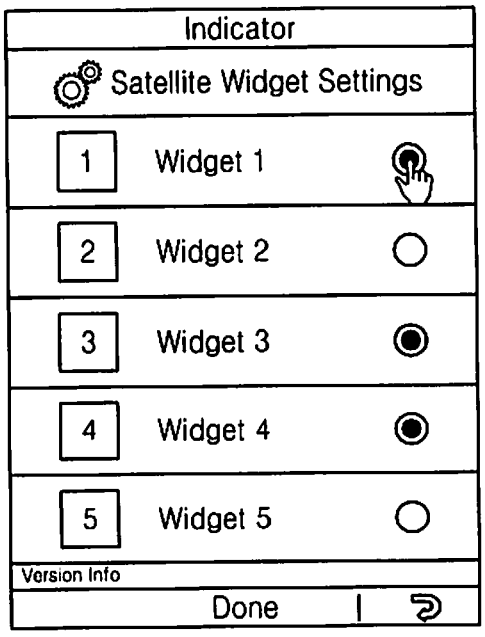
Indicator
Satellite Widget Settings
1
Widget 1
2
Widget 2
3
Widget 3
4
Widget 4
5
Widget 5
Version Info
Done

FIG. 7

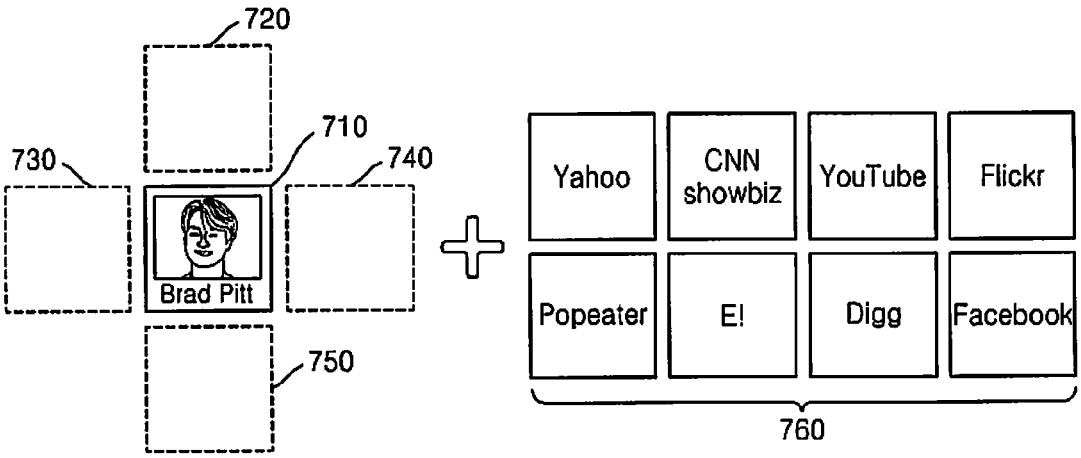
720
710
730
740
Brad Pitt
750
Yahoo
CNN showbiz
YouTube
Flickr
Popeater
E!
Digg
Facebook
760

FIG. 8

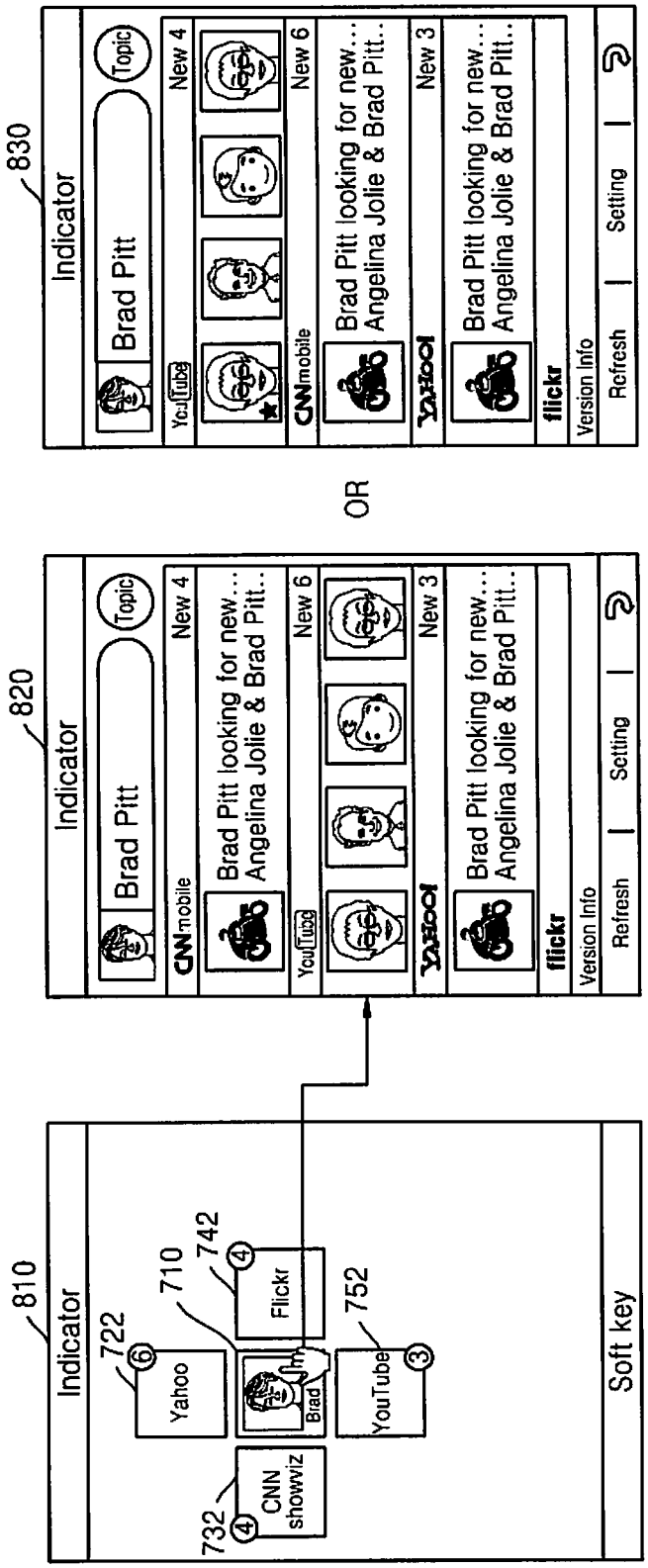
810
Indicator
722
Yahoo
710
742
Flickr
752
YouTube
732
CNN showviz
Brad
Soft key
820
Indicator
Brad Pitt
Topic
New 4
Brad Pitt looking for new....
Angelina Jolie & Brad Pitt..
New 6
New 3
Refresh
Setting
Version Info
OR
830
Indicator
Brad Pitt
Topic
New 4
New 6
Brad Pitt looking for new....
Angelina Jolie & Brad Pitt..
New 3
Refresh
Setting
Version Info

FIG. 9

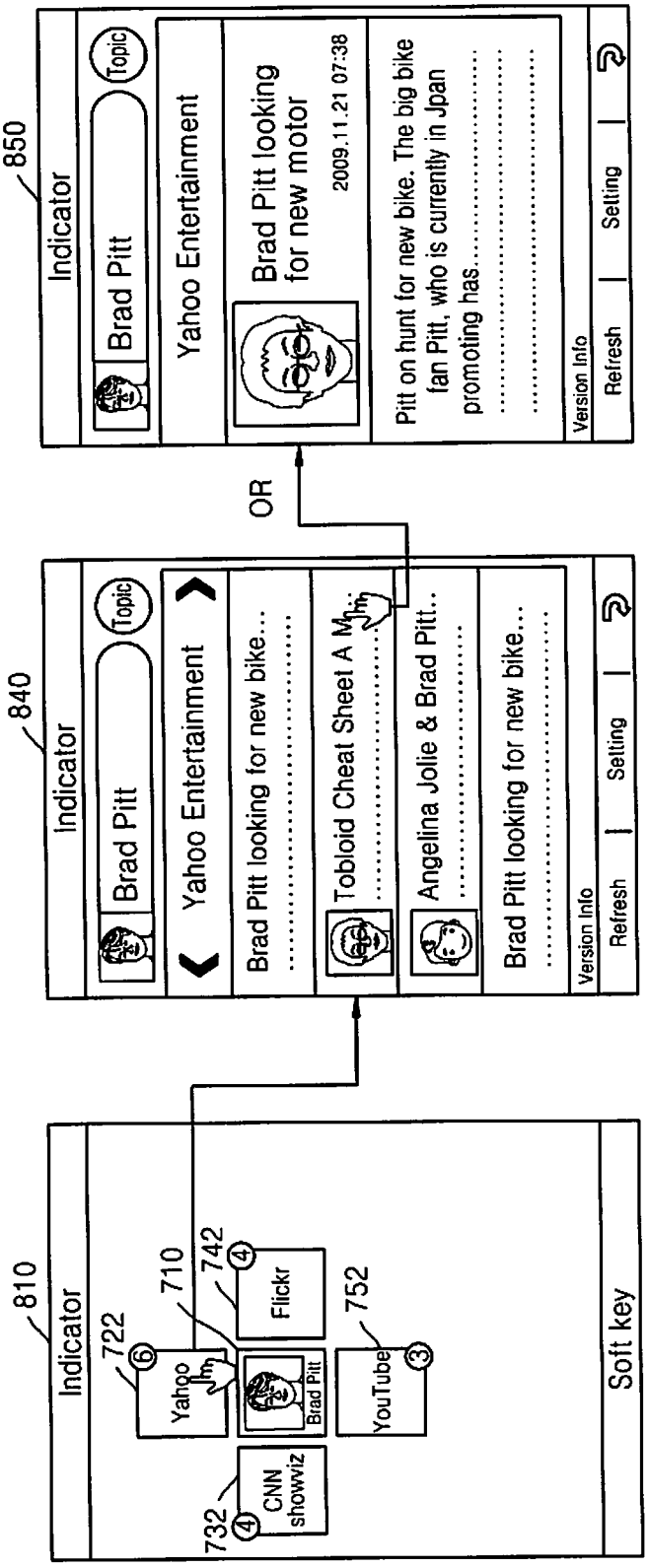
810
Indicator
722
Yahoo
710
742
Flickr
752
YouTube
732
CNN showviz
Soft key
840
Indicator
Brad Pitt
Topic
Yahoo Entertainment
Brad Pitt looking for new bike...
Tobloid Cheat Sheet A M...
Angelina Jolie & Brad Pitt..
Brad Pitt looking for new bike...
Version Info
Refresh
Setting
OR
850
Indicator
Brad Pitt
Topic
Yahoo Entertainment
Brad Pitt looking for new motor
2009.11.21 07:38
Pitt on hunt for new bike. The big bike fan Pitt, who is currently in Jpan promoting has.....
Version Info
Refresh
Setting

FIG. 10

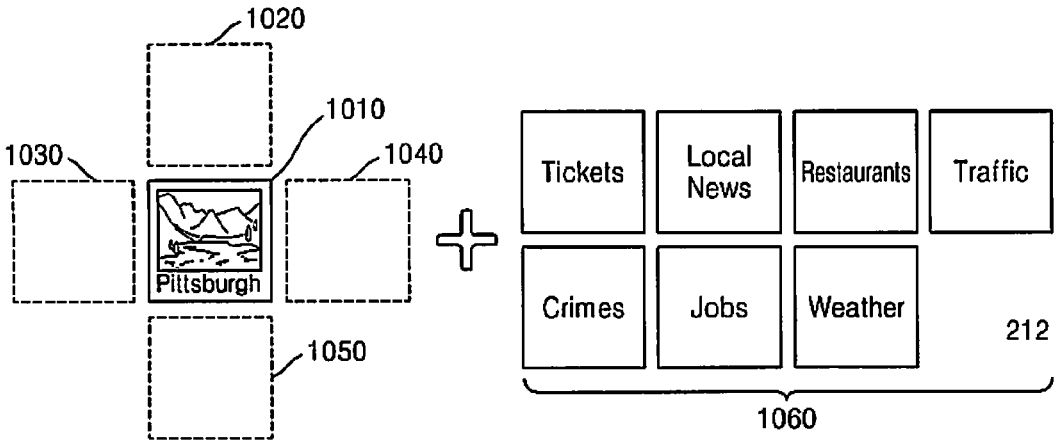
1020
1010
1030
1040
Pittsburgh
1050
Tickets
Local News
Restaurants
Traffic
Crimes
Jobs
Weather
212
1060

FIG. 11

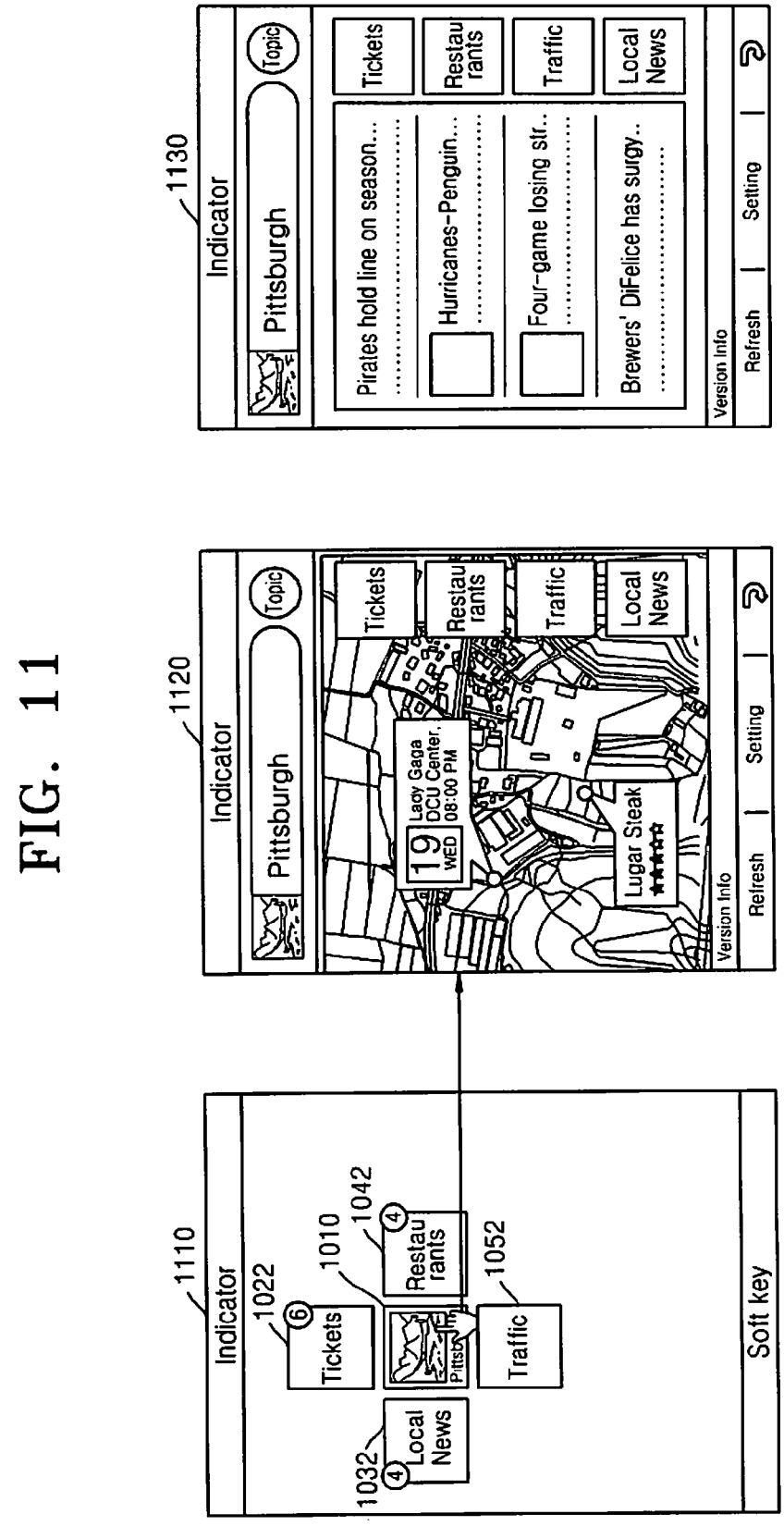
1110
Indicator
1022
6
Tickets
1010
1042
4
Restau rants
1052
Traffic
1032
4
Local News
Soft key
1120
Indicator
Pittsburgh
Topic
Tickets
Restau rants
Traffic
Local News
19
WED
Lady Gaga
DCU Center
08:00 PM
Lugar Steak
Version Info
Refresh
Setting
1130
Indicator
Pittsburgh
Topic
Tickets
Restau rants
Traffic
Local News
Pirates hold line on season...
Hurricanes-Penguin...
Four-game losing str..
Brewers' DiFelice has surgy..
Version Info
Refresh
Setting

FIG. 12

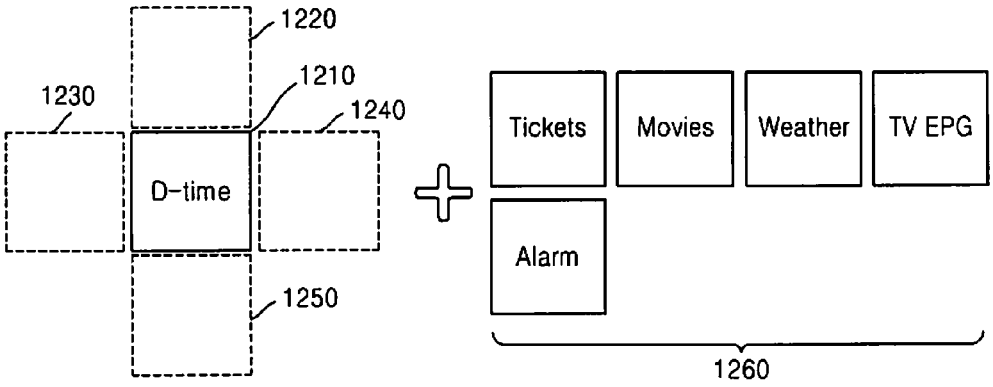
1220
1210
1230
1240
D-time
1250
Tickets
Movies
Weather
TV EPG
Alarm
1260

FIG. 13

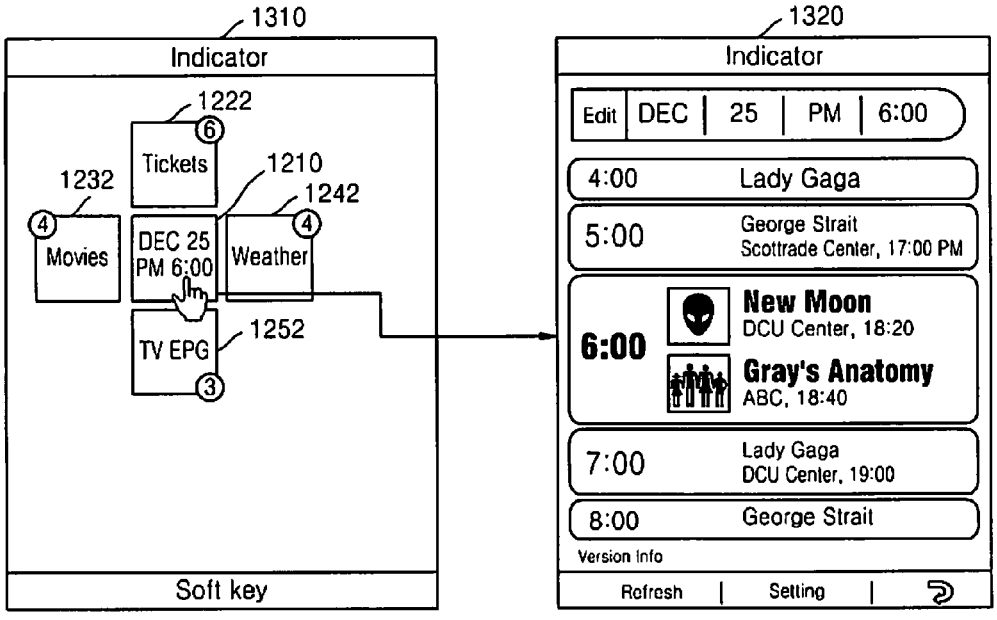
1310
Indicator
1222
Tickets
1232
1210
1242
Movies
DEC 25
PM 6:00
Weather
TV EPG
1252
Soft key
1320
Indicator
Edit
DEC
25
PM
6:00
4:00
Lady Gaga
5:00
George Strait
Scottrade Center, 17:00 PM
6:00
New Moon
DCU Center, 18:20
Gray's Anatomy
ABC, 18:40
7:00
Lady Gaga
DCU Center, 19:00
8:00
George Strait
Version Info
Refresh
Setting

FIG. 14A

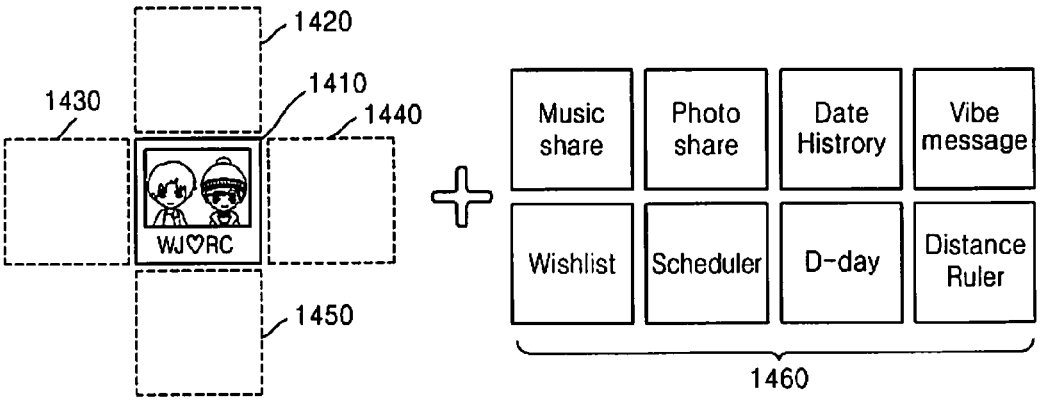

FIG. 14B

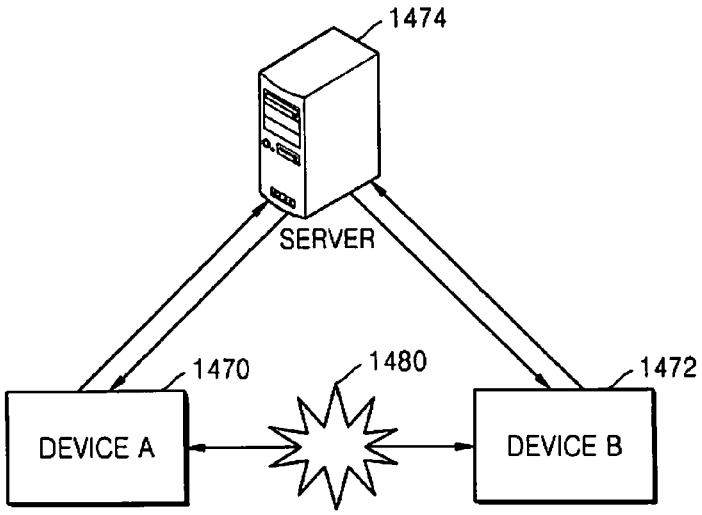

FIG. 15A

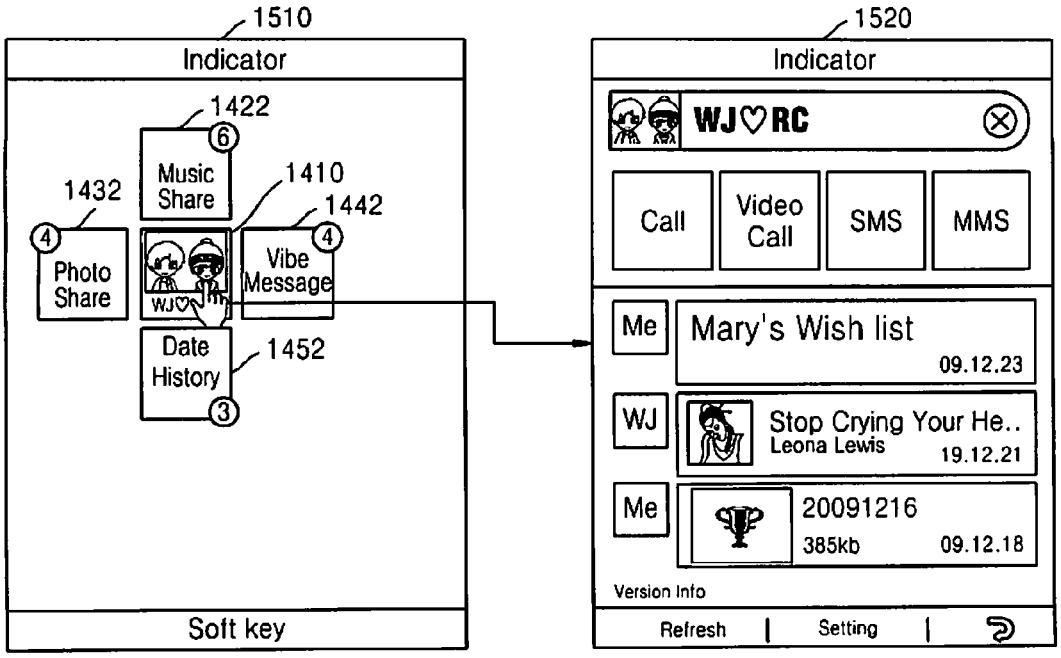

FIG. 15B

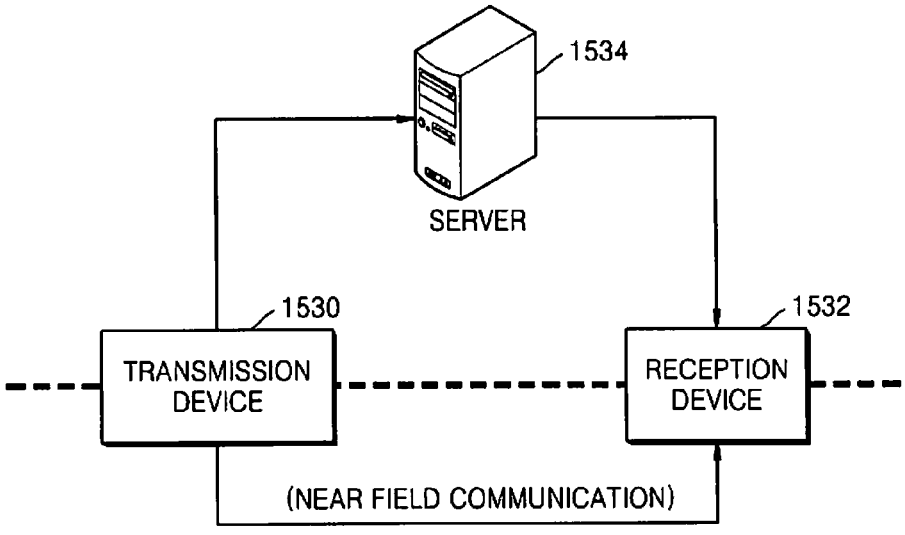

FIG. 15C

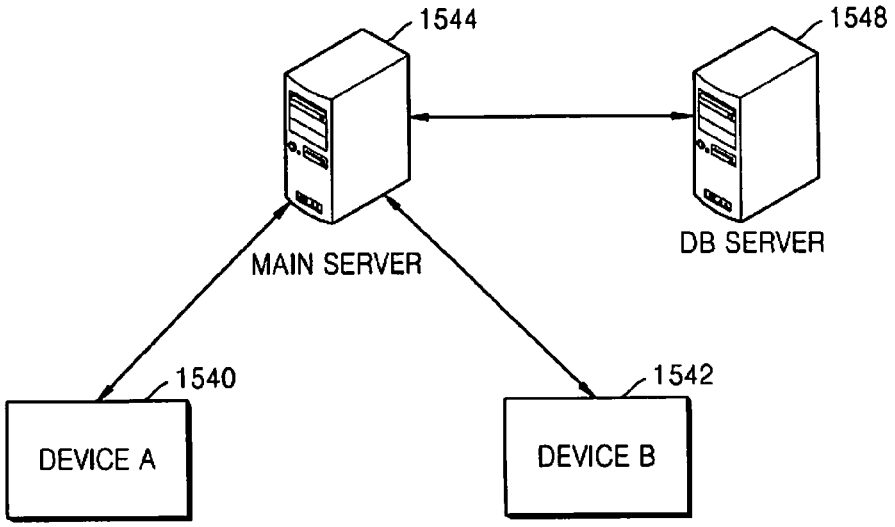

FIG. 16

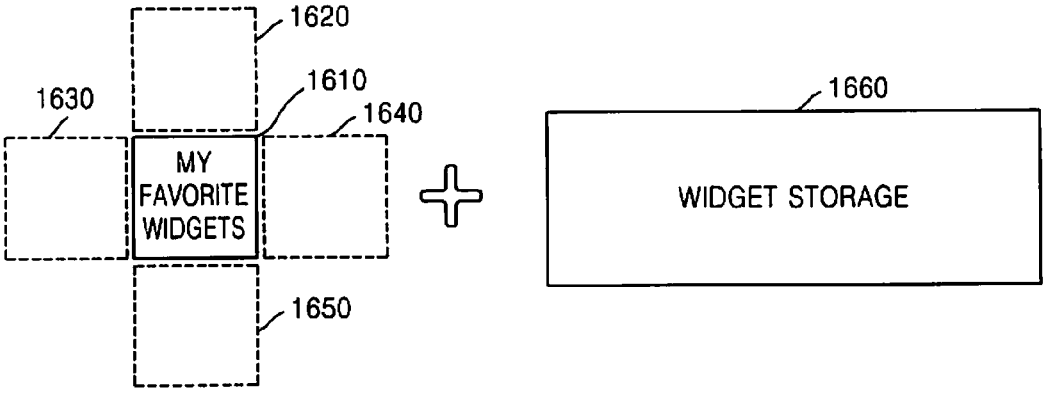

FIG. 17

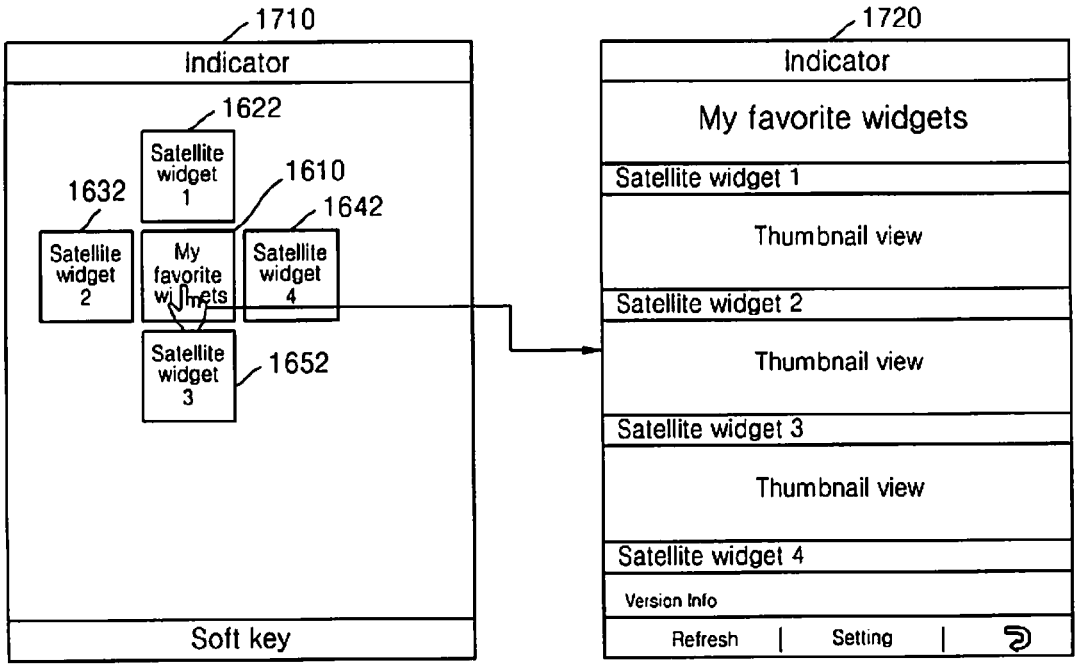
1710
Indicator
1622
Satellite widget 1
1610
1632
1642
Satellite widget 2
My favorite widgets
Satellite widget 4
Satellite widget 3
1652
Soft key
1720
Indicator
My favorite widgets
Satellite widget 1
Thumbnail view
Satellite widget 2
Thumbnail view
Satellite widget 3
Thumbnail view
Satellite widget 4
Version Info
Refresh | Setting |

FIG. 18

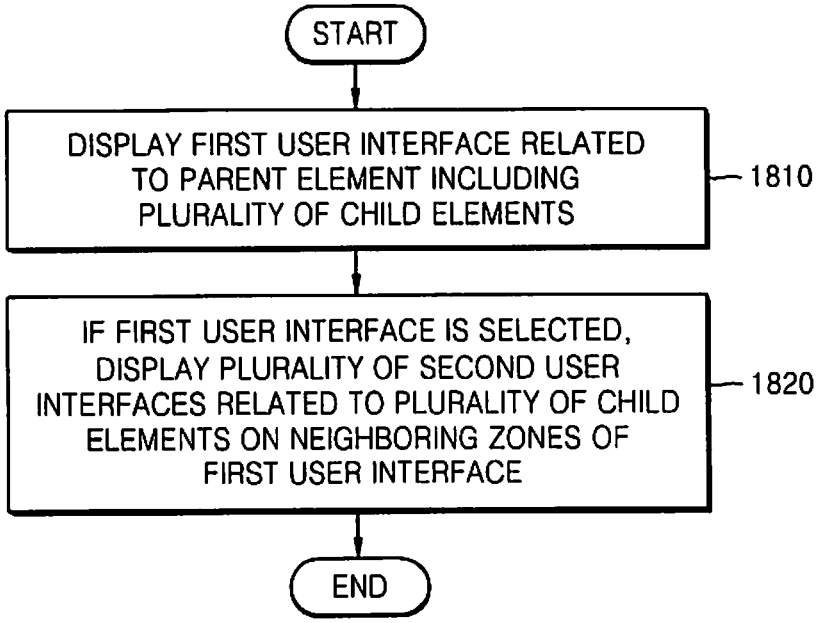
START
DISPLAY FIRST USER INTERFACE RELATED TO PARENT ELEMENT INCLUDING PLURALITY OF CHILD ELEMENTS
1810
IF FIRST USER INTERFACE IS SELECTED, DISPLAY PLURALITY OF SECOND USER INTERFACES RELATED TO PLURALITY OF CHILD ELEMENTS ON NEIGHBORING ZONES OF FIRST USER INTERFACE
1820
END

FIG. 19

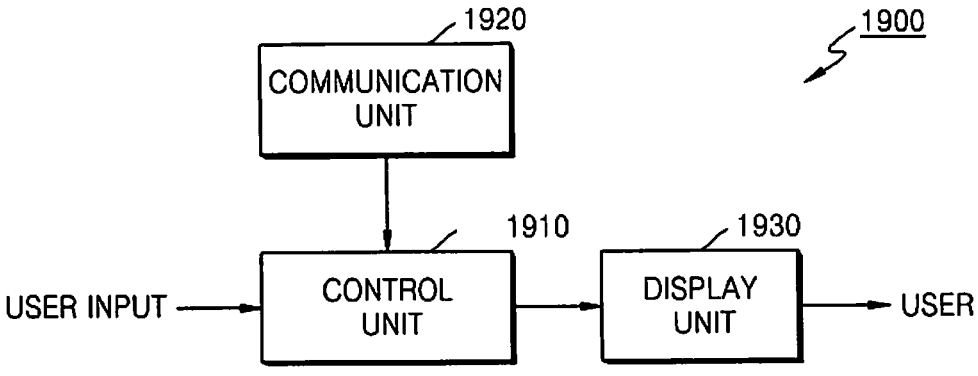
1920
COMMUNICATION UNIT
1900
1910
1930
USER INPUT
CONTROL UNIT
DISPLAY UNIT
USER

METHOD AND APPARATUS FOR PROVIDING A USER INTERFACE

PRIORITY

This application is a Continuation of U.S. application Ser. No. 13/026,831, filed on Feb. 14, 2011, which claims priority to Korean Patent Application Nos. 10-2010-0013602, 10-2010-0014744, and 10-2010-0066417, which were filed in the Korean Intellectual Property Office on Feb. 12, 2010, Feb. 18, 2010, and Jul. 9, 2010, respectively, the entire content of each of which is incorporated herein by reference.

BACKGROUND OF THE INVENTION

1. Field of the Invention

The present invention relates to a method and apparatus for providing a user interface on which a user desired service is easily accessible.

2. Description of the Related Art

As the performance of mobile devices improves, services provided to a user of a mobile device are diversifying. In order to use different services on a generally smaller screen of a mobile device, a user interface capable of easily and rapidly accessing a service is important.

SUMMARY OF THE INVENTION

Accordingly, an aspect of the present invention is to provide a method and apparatus for displaying a user interface capable of maximizing user convenience, and a computer-readable recording medium having recorded thereon a computer program for executing the method.

According to an aspect of the present invention, a method for providing a user interface, at a device, is provided. The method includes displaying a first user interface associated with a specific user; receiving a selection of the first user interface; and displaying a communication function list for connecting with the specific user.

According to another aspect of the present invention, an apparatus for providing a user interface is provided. The apparatus includes a communication unit for communicating with a specific user; a control unit for generating a first user interface associated with the specific user; and a display unit for displaying the first user interface, and displaying a communication function list for connecting with the specific user when the displayed first user interface is selected.

According to another aspect of the present invention, a method for providing a user interface is provided. The method includes displaying a first user interface; receiving a first keyword from a user through the first user interface; determining at least one second keyword associated with the first keyword; transmitting the at least one second keyword to at least one contents provider; receiving information related to the at least one second keyword from the at least one contents provider; and displaying an abstract of the information related to the at least one second keyword from the at least one contents provider.

According to another aspect of the present invention, an apparatus for providing a user interface is provided. The apparatus includes a control unit for generating a first user interface for receiving a first keyword from a user and determining at least one second keyword associated with the first keyword; a communication unit for transmitting the at least one second keyword to at least one contents provider, and receiving information related to the at least one second keyword from the at least one contents provider; and a display unit for displaying the first user interface and an abstract of the information related the at least one second keyword from the at least contents provider.

In accordance with another aspect of the present invention, a computer-readable recording medium is provided, which has recorded thereon, a computer program for executing any of the above methods.

BRIEF DESCRIPTION OF THE DRAWINGS

The above and other aspects, features, and advantages of certain embodiments of the present invention will become more apparent from the following descriptions thereof with reference to the attached drawings, in which:

FIG. **1**A illustrates user interfaces according to an embodiment of the present invention;

FIG. **1**B is a flowchart illustrating a method of displaying a user interface according to an embodiment of the present invention;

FIG. **1**C is a diagram illustrating a method of receiving update content according to an embodiment of the present invention;

FIG. **1**D is a flowchart illustrating a method of displaying a plurality of second user interfaces according to an embodiment of the present invention;

FIG. **1**E is a flowchart illustrating a method of displaying content according to an embodiment of the present invention;

FIG. **2** illustrates screen images when editing second user interfaces related to child elements, according to an embodiment of the present invention;

FIG. **3** illustrates screen images when changing a parent element on a user interface related to the parent element, according to an embodiment of the present invention;

FIGS. **4**A through **4**C illustrate alignments of a first user interface related to a parent element and a plurality of second user interfaces related to child elements, according to different embodiments of the present invention;

FIG. **5** illustrates a method of returning to a state when only a first user interface related to a parent element is displayed, according to an embodiment of the present invention;

FIGS. **6**A and **6**B illustrate methods of selecting a plurality of second user interfaces related to child elements, according to different embodiments of the present invention.

FIG. **7** illustrates a user interface related to a keyword, according to an embodiment of the present invention;

FIGS. **8** and **9** illustrate screen images when displaying a user interface related to a keyword, according to different embodiments of the present invention;

FIG. **10** illustrates a user interface related to a name of a region, according to an embodiment of the present invention;

FIG. **11** illustrates screen images when displaying a user interface related to a name of a region, according to an embodiment of the present invention;

FIG. **12** illustrates a user interface related to a certain time, according to an embodiment of the present invention;

FIG. **13** illustrates screen images when displaying a user interface related to a certain time, according to an embodiment of the present invention;

FIG. **14**A illustrates a user interface related to an association between devices, according to an embodiment of the present invention;

FIG. **14**B is a diagram illustrating data sharing between devices, according to an embodiment of the present invention;

FIG. **15**A illustrates screen images when displaying a user interface related to association between devices, according to an embodiment of the present invention;

FIG. **15**B is a diagram illustrating a method of transceiving a vibe message, according to an embodiment of the present invention;

FIG. **15**C is a diagram illustrating a method of providing a date history service, according to an embodiment of the present invention;

FIG. **16** illustrates a user interface related to a favorite widget setting, according to an embodiment of the present invention;

FIG. **17** illustrates screen images when displaying a user interface related to a favorite widget setting, according to an embodiment of the present invention;

FIG. **18** is a flowchart illustrating a method of providing a user interface, according to an embodiment of the present invention; and

FIG. **19** is a block diagram illustrating an apparatus for providing a user interface, according to an embodiment of the present invention.

DETAILED DESCRIPTION OF EMBODIMENTS OF THE INVENTION

Hereinafter, various embodiments of the present invention will be described in detail with reference to the attached drawings.

FIG. **1**A illustrates user interfaces according to an embodiment of the present invention. For example, the user interfaces may be widgets.

Referring to FIG. **1**A, an apparatus for providing a user interface displays on a screen **100** a first user interface **110** related to a parent element including a plurality of child elements.

The first user interface **110** is displayed on the screen **100** together with other user interfaces. For example, indicators for indicating a signal reception state and battery life of a mobile device may be displayed on a top portion of the screen **100**, and soft keys for executing functions available on a current screen may be displayed on a bottom portion of the screen **100**.

The first user interface **110** may be a user interface related to a keyword registered by the user. In FIG. **1**A, the first user interface **110** is a user interface related to "Beyonce", i.e., a current keyword of the user. Also, the first user interface **110** includes a user interface **112** for indicating update content related to the keyword. The number of update content related to the keyword may be displayed as a number. In FIG. **1**A, the user interface **112** indicates that there are 29 content updates related to "Beyonce".

FIG. **1**B is a flowchart illustrating a method of displaying the first user interface **110** according to an embodiment of the present invention.

Referring to FIG. **1**B, in step **170**, the device displays the first user interface **110** on the screen **100**. For example, the first user interface **110** may be displayed on the screen **100** by pressing an execution button for displaying the first user interface **110** on the screen **100**, or by dragging the first user interface **110** located in a tray or a popup menu onto the screen **100** by using a drag & drop method.

In step **172**, the device requests content related to a keyword from one or more content providers. The content providers may receive a request for content related to the keyword registered by the user of the device, or recommended by the device. A method of requesting for contents will be described in more detail below with reference to FIG. **1**C.

In step **174**, the device receives and stores the content related to the keyword from the content providers. For example, the content may include various multimedia content related to the keyword, e.g., news, images, and videos.

According to another embodiment of the present invention, instead of requesting and receiving content as illustrated in operations **172** and **174**, the request might only be for whether the content providers have updated content related to the keyword. Information indicating a time when the content related to the keyword were last received may be provided as a request to the content providers, and information indicating whether updated content exists and information regarding the number of update content may be received in response to the request.

In step **176**, the device determines whether the update content related to the keyword exist, based on the content received in step **174**. If the received content is different from previously stored content, the device may determine that updated contents exist. Also, if information indicating whether the updated content exists is received from the content providers, whether update content exists is determined based on the received information.

In step **177**, the device determines the number of update content. A total number of the update content related to the keyword is determined based on content received from all content providers. If the information regarding the number of update content is received from the content providers, the total number of update content related to the keyword is determined by summing the number of update contents from each content provider.

In step **178**, the device displays the first user interface **110** on the screen **100**. If the total number of update content related to the keyword is determined in step **177**, information regarding the total number is also displayed on the user interface **112** of the screen **100**.

FIG. **1**C illustrates a method of receiving update content according to an embodiment of the present invention.

Referring to FIG. **1**C, the device receives content from one or more servers **124**, **134**, **144**, and **154**. Updated content is received from one or more servers operated by the content providers. A keyword of the first user interface **110** (e.g., Beyonce) is transmitted to the servers **124**, **134**, **144**, and **154**, and updated content is received in response to the transmitted keyword. The updated content may be received from the servers **124**, **134**, **144**, and **154** in the form of eXtensible Markup Language (XML) documents.

Referring back to FIG. **1**A, if the user selects the first user interface **110**, e.g., by touching the screen **100** or by using another input apparatus, the first user interface **110** and a plurality of second user interfaces **120**, **130**, **140**, and **150** are displayed on a subsequent screen **102**. The second user interfaces **120**, **130**, **140**, and **150** are user interfaces related to child elements. In order to represent correlations between the child elements of the second user interfaces **120**, **130**, **140**, and **150** and the parent element of the first user interface **110**, the second user interfaces **120**, **130**, **140**, and **150** are displayed on the neighboring zones of the first user interface **110**.

More specifically, in FIG. **1**A, the second user interfaces **120**, **130**, **140**, and **150** are displayed on the top, bottom, left, and right neighboring zones of the first user interface **110**. The first user interface **110** may be a user interface related to the keyword, i.e., the parent element, and the second user

interfaces **120**, **130**, **140**, and **150** may be a plurality of user interfaces related to the child elements of the keyword, i.e., the content providers for providing the contents related to the keyword.

Although the second user interfaces **120**, **130**, **140**, and **150** are displayed on the top, bottom, left, and right neighboring zones of the first user interface **110**, the neighboring zones of the first user interface **110** are not limited thereto and may be any neighboring zones around the first user interface **110** in different directions. For example, the second user interfaces **120**, **130**, **140**, and **150** may be displayed on one or more of top-left, bottom-left, top-right, and bottom-right neighboring zones of the first user interface **110**.

The neighboring zones of the first user interface **110** may extend. For example, the second user interfaces **120**, **130**, **140**, and **150** may be displayed on neighboring zones of one or more of the top, bottom, left, right, top-left, bottom-left, top-right, and bottom-right neighboring zones of the first user interface **110**, and one or more other user interfaces may be additionally displayed on outer neighboring zones of the second user interfaces **120**, **130**, **140**, and **150**. Also, one or more other user interfaces may be additionally displayed on diagonal neighboring zones including the top-left, left bottom, top-right, and bottom-right neighboring zones of the first user interface **110**.

In FIG. **1**A, content providers that provide content related to the parent element "Beyonce" are set as the child elements, and the second user interfaces **120**, **130**, **140**, and **150** related to the content providers are displayed around the first user interface **110** related to "Beyonce". The second user interfaces **120**, **130**, **140**, and **150** may include user interfaces **122** and **152** for indicating updated content.

When the screen **100** changes into screen **102** and thus the second user interfaces **120**, **130**, **140**, and **150** are displayed, various different effects may be used. These effects are not restricted. For example, the first user interface **110** may be unfolded in top, bottom, left, and right directions to display the second user interfaces **120**, **130**, **140**, and **150**. In this case, the first user interface **110** may be unfolded in top, bottom, left, and right directions as if pages of a book are turned, to display the second user interfaces **120**, **130**, **140**, and **150**. According to another embodiment of the present invention, the first user interface **110** may slide in top, bottom, left, and right directions to display the second user interfaces **120**, **130**, **140**, and **150**, respectively.

If the first user interface **110** is not located at the center of the screen **100**, the first user interface **110** may be moved to the center of the screen **102** and then the second user interfaces **120**, **130**, **140**, and **150** may be displayed on the neighboring zones of the first user interface **110**. The first user interface **110** located at a left top portion of the screen **100** is moved to the center of the screen **102**, and then is unfolded in top, bottom, left, and right directions to display the second user interfaces **120**, **130**, **140**, and **150**.

Also, when the first user interface **110** is relatively large in size for the display screen, if the first user interface **110** is unfolded in top, bottom, left, and right directions while maintaining the size, the second user interfaces **120**, **130**, **140**, and **150** may be displayed beyond boundaries of the screen **102**.

Alternatively, according to another embodiment of the present invention, the first user interface **110** may be moved to the center of the screen **102** and reduced in size. After the first user interface **110** is reduced in size so as to allow the first user interface **110** and the second user interfaces **120**, **130**, **140**, and **150** to be displayed on the screen **102** at the same time, the reduced first user interface **110** may be unfolded to display the second user interfaces **120**, **130**, **140**, and **150**.

Although FIG. **1**A illustrates the second user interfaces **120**, **130**, **140**, and **150** being displayed on the neighboring zones of the first user interface **110**, if the first user interface **110** is selected, alternatively, if the first user interface **110** is not displayed on the screen **100**, e.g., is located in a tray or a popup menu, and is dragged onto the screen **100** by using a drag & drop method, together with the first user interface **110**, the second user interfaces **120**, **130**, **140**, and **150** may be automatically displayed on the neighboring zones of the first user interface **110**. In this case, the dragged first user interface **110** may also be unfolded to display the second user interfaces **120**, **130**, **140**, and **150**, as described above.

FIG. **1**D is a flowchart illustrating a method of displaying the second user interfaces **120**, **130**, **140**, and **150**, according to an embodiment of the present invention.

Referring to FIG. **1**D, in step **180**, the user of the device selects the first user interface **110** displayed on the screen **100**. For example, the first user interface **110** displayed on the screen **100** may be touched.

In step **182**, the device determines whether each of the content providers has updated content. When the first user interface **110** is selected, the second user interfaces **120**, **130**, **140**, and **150** are displayed, and the displayed second user interfaces **120**, **130**, **140**, and **150** may include the user interfaces **122** and **152** for indicating a number of updated content. As such, the device determines whether each of the content providers has updated content. As described above in relation to FIG. **1**B, if information indicating whether updated content exists and information indicating the number of updated content is received from the content providers, whether the updated content exists is determined based on the received information.

In step **183**, the device determines the number of updated content of each of the content providers. If information regarding the number of update contents is received from each of the content providers, the number of update contents is determined based on the received information.

In step **184**, the device displays on the screen **102** the second user interfaces **120**, **130**, **140**, and **150** on which the numbers of updated content are displayed as illustrated in FIG. **1**A. The second user interfaces **120**, **130**, **140**, and **150** are displayed on the neighboring zones of the first user interface **110** together with the first user interface **110**.

Referring back to FIG. **1**A, when the user selects the first user interface **110** on the screen **102** on which the first user interface **110** and the second user interfaces **120**, **130**, **140**, and **150** are displayed, a subsequent screen **104** including content is displayed.

Small images and abstracted information related to "Beyonce" are aligned in a certain order and are displayed on the screen **104**. The order may be determined according to number of updates or the content providers. Because one of the second user interfaces **120**, **130**, **140**, and **150** was not selected on the previous screen **102**, the content of all content providers is displayed on screen **104**.

Also, the screen **104** may include a user interface for changing the parent element. For example, a user interface **160** will change the parent element from "Beyonce" to "Chelsea" and a user interface **162** will change the parent element from "Beyonce" to "Brittany". Because the parent element may be changed on the last screen **104**, an inconvenience of returning to the initial screen **100** to change the parent element may be prevented.

FIG. **1**E is a flowchart illustrating a method of displaying content according to an embodiment of the present invention.

Referring to FIG. **1**E, in step **190**, the device displays the first user interface **110** and the second user interfaces **120**, **130**, **140**, and **150** on the screen **102**. As described above in relation to FIG. **1**D, the second user interfaces **120**, **130**, **140**, and **150** may be displayed on neighboring zones of the first user interface **110**. The second user interfaces **120**, **130**, **140**, and **150** are user interfaces related to the content providers.

In step **192**, the user of the device selects one of the first user interface **110** and the second user interfaces **120**, **130**, **140**, and **150**. In FIG. **1**A, one of the first user interface **110** and the second user interfaces **120**, **130**, **140**, and **150** may be selected.

If the user selects the first user interface **110** in step **192**, in step **194**, the device searches for all content related to the keyword based on content received from the servers **124**, **134**, **144**, and **154** operated by the content providers. Because the user re-selects the first user interface **110** related to the keyword in operation **192**, instead of selecting one of the second user interfaces **120**, **130**, **140**, and **150** related to the content providers, respectively, content is searched from all of the content providers. The device may search for content previously received from the servers **124**, **134**, **144**, and **154** and stored in a storage of the device, or may request the servers **124**, **134**, **144**, and **154** for the content related to the keyword and may receive the content in response to the request.

If the user selects one of the second user interfaces **120**, **130**, **140**, and **150** in step **192**, in step **196**, the device searches for the content related to the keyword from among content provided by a content provider of the selected second user interface. That is, because the second user interfaces **120**, **130**, **140**, and **150** are related to the content providers, i.e., the child elements of the keyword, when the user selects one of the second user interfaces **120**, **130**, **140**, and **150** to display only the content of a certain content provider, the device searches for only the content related to the selected content provider, i.e., a child element, from among the contents related to the keyword, i.e., the parent element. Again, the device may search for content previously received from the servers **124**, **134**, **144**, and **154** and stored in a storage of the device, or may request a server operated by a content provider related to the selected second user interface for the content related to the keyword and may receive the content in response to the request.

In step **198**, the device display the content searched for in steps **194** or **196**. If the content of all content providers is searched for in operation **194**, all content related to the keyword are displayed, as illustrated on the screen **104** of FIG. **1**A. However, if the content of the certain content provider are searched for in step **196**, only the content related to the keyword, which is received from the certain content provider, is displayed.

FIG. **2** illustrates screen images when editing second user interfaces related to child elements, according to an embodiment of the present invention.

Referring to FIG. **2**, the second user interfaces related to the child elements may be added or deleted according to user preference. A second user interface related to a child element may be added by selecting the second user interface displayed on a tray at a bottom portion of a screen and placing the second user interface at a neighboring location of a first user interface. Alternatively, the second user interface may be added by selecting one of the second user interfaces displayed on the tray, and selecting a location to which the selected second user interface is located, or by dragging and dropping one of the second user interfaces from the tray to a certain location.

In FIG. **2**, for example, from among content providers, i.e., child elements, for providing contents related to "Beyonce", i.e., a parent element, a second user interface **210** related to Facebook® is dragged and dropped to a bottom-right neighboring zone of a first user interface, thereby adding the second user interface **212**.

FIG. **3** illustrates screen images when changing a parent element on a user interface related to the parent element, according to an embodiment of the present invention.

Referring to FIG. **3**, a user may change the parent element on the screen **100** on which only the user interface related to the parent element, i.e., a first user interface **310**, is displayed. In order to provide access to a plurality of parent elements on a restricted screen, a first user interface **310** may be displayed on the screen and the parent element may be changed. Accordingly, the first user interface **310** may include user interfaces **320** and **330**, e.g., scroll arrows, for changing the parent element.

When the user selects one of the user interfaces **320** and **330** for changing the parent element, the first user interface **310** is changed into a user interface related to "Audi A6" on a subsequent screen **106**.

FIGS. **4**A through **4**C illustrate alignments of a first user interface related to a parent element and a plurality of second user interfaces related to child elements, according to different embodiments of the present invention. In FIGS. **4**A through **4**C, for example, the first and second user interfaces are widgets.

FIG. **4**A illustrates second widgets related to child elements being aligned on the top, bottom, left, and right neighboring zones of a first widget related to a parent element, as described above in relation to FIGS. **1**A, **2**, and **3**. Although, the first and second widgets have the same rectangular shape and have the same size in FIG. **4**A, the sizes may vary.

FIG. **4**B illustrates various-sized, circular second widgets being aligned on neighboring zones of a square first widget related to a parent element.

FIG. **4**C illustrates a plurality of first widgets related to parent elements being displayed on the same screen. The second widgets are aligned as illustrated in FIG. **4**A. However, FIG. **4**C is different from FIG. **4**A in that a current first widget and other first widgets are displayed on a screen.

FIG. **5** illustrates a method of returning to a state when only a first user interface related to a parent element is displayed, according to an embodiment of the present invention.

When a user selects a first user interface **510**, a plurality of second user interfaces **520**, **530**, **540**, and **550** related to a plurality of child elements of the parent element of the first user interface **510** are displayed on neighboring zones of the first user interface **510**. Thereafter, if the user selects an area of the screen on which the first user interface **510** and the second user interfaces **520**, **530**, **540**, and **550** are not displayed, the second user interfaces **520**, **530**, **540**, and **550** disappear and the screen returns to the state when only the first user interface **510** is displayed.

Alternatively, the second user interfaces **520**, **530**, **540**, and **550** may disappear when the user does not enter any input for a certain period of time.

FIGS. **6**A and **6**B illustrate methods of selecting a plurality of second user interfaces related to child elements, according to different embodiments of the present invention.

As described above in relation to FIG. **2**, second user interfaces related to child elements may be selected and displayed on a screen by using a drag & drop method. However, as illustrated in FIG. **6**A, second user interfaces to be displayed on neighboring zones of a first user interface may also be selected from among a plurality of second user interfaces (widgets) displayed on a main screen, instead of a tray. For example, a user may select the second user interfaces to be displayed on the neighboring zones of the first user interface, as illustrated in FIG. **6**A, and the selected second user interfaces may be displayed according to a certain rule.

Further, as illustrated in FIG. **6**B, second user interfaces to be displayed on neighboring zones of a first user interface may be selected by checking selection boxes on a list of a plurality of second user interfaces (e.g., widgets).

FIG. **7** illustrates a user interface related to a keyword, according to an embodiment of the present invention.

Referring to FIG. **7**, a first user interface **710** is related to the keyword "Brad Pitt". The keyword may be registered by a user on a device for displaying user interfaces, or may be recommended by the device. The user may register the keyword desired by the user to continuously receive related information via a certain user interface.

Alternatively, the keyword may be recommended by the device to the user according to a certain algorithm. The keyword may be recommended by analyzing characteristics of the user, e.g., a current location of the device of the user, an address of the user, and hobbies of the user. Also, a communication carrier for providing a mobile communication service to the user may analyze the characteristics of the user to recommend the keyword of the first user interface **710**.

If the keyword desired by the user to continuously receive related information is a parent element, content providers for providing content related to the keyword may be child elements.

In FIG. **7**, the available content providers for providing content, e.g., news, videos, and images related to Brad Pitt include, e.g., Yahoo®, CNN Showbiz®, YouTube®, Flickr®, Popeater®, E!®, Digg®, and Facebook®, may be the child elements.

Accordingly, when the first user interface **710** is a user interface related to the parent element, i.e., the keyword, a plurality of second user interfaces **760** related to the child elements, i.e., the content providers, may be displayed on neighboring zones **720**, **730**, **740**, and **750** of the first user interface **710**.

FIG. **8** illustrates screen images when displaying a user interface related to a keyword, according to an embodiment of the present invention.

Referring to FIG. **8**, a first user interface **710** and a plurality of second user interfaces **722**, **732**, **742**, and **752** are displayed on a screen **810**.

When a user selects the first user interface **710** on the screen **810**, content related to the keyword registered by the user, i.e., Brad Pitt, is displayed. Because the user did not select one of the second user interfaces **722**, **732**, **742**, and **752**, content from all content providers are displayed on a screen **820**.

When the content is displayed, content of a recently frequently used content provider may be located at an upper portion of a screen **830**. For example, if the user most often uses YouTube®, content from YouTube® is located at an upper portion of the screen **830** with respect to contents of the other content providers.

FIG. **9** illustrates screen images when displaying a user interface related to a keyword, according to another embodiment of the present invention.

When the user selects the second user interface **722** related to Yahoo®, instead of the first user interface **710**, content from Yahoo® is displayed on a screen **840**. Thereafter, when the user selects one of the content items based on abstracted information displayed on the screen **840**, the selected content is displayed on a screen **850**.

Although FIG. **9** illustrates the user selecting the second user interface **722**, when the user selects the second user interface **732**, **742**, or **752** similar abstracted information will be displayed for the selected second user interface **732**, **742**, or **752**. However, the configurations of the screen **840** for displaying the abstracted information of the content and the screen **850** for displaying the whole selected content may differ.

For example, if the user selects the second user interface **752** related to YouTube® for providing videos, abstracted information of the videos related to Brad Pitt will be displayed on the screen **840**. Then, if the user selects a certain video on the screen **840**, the selected video will be reproduced on the subsequent screen **850**. Further, if the user selects the second user interface **742** related to Flickr® for providing images, thumb-nails of images related to Brad Pitt will be displayed on the screen **840**. Then, if the user selects a certain thumb-nail image on the screen **840**, the selected image will be magnified and displayed on the subsequent screen **850**.

FIG. **10** illustrates a user interface related to a name of a region, according to an embodiment of the present invention.

Referring to FIG. **10**, a first user interface **1010** may be the user interface related to the name of the region, e.g., Pittsburgh. If the name of the region desired by a user to continuously receive related information is a parent element, categories of information related to the region may be child elements. In FIG. **10**, the categories of information related to the region, e.g., "Tickets", "Local News", "Restaurant", "Traffic", "Crimes", "Jobs", and "Weather", may be the child elements. Tickets is a category of information regarding tickets for concerts, sports games, exhibitions, movies, etc. in the region, Local News is a category of news in the region, Restaurants is a category of information regarding restaurants in the region, Traffic is a category of information regarding traffic in the region, Crime is a category of information regarding criminal records and crime-ridden areas in the region, Jobs is a category of information regarding job opportunities in the region, and Weather is a category of information regarding the weather in the region.

Accordingly, if the first user interface **1010** is a user interface related to the parent element, i.e., the name of the region, a plurality of second user interfaces **1060** related to the child elements, i.e., the categories of information, may be displayed on neighboring zones **1020**, **1030**, **1040**, and **1050** of the first user interface **1010**.

FIG. **11** illustrates screen images when displaying a user interface related to a name of a region, according to an embodiment of the present invention.

Referring to FIG. **11**, a first user interface **1010** and a plurality of second user interfaces **1022**, **1032**, **1042**, and **1052** are displayed on a screen **1110**.

When a user selects the first user interface **1010** on the screen **1110**, four categories of information related to the region registered by the user, i.e., Pittsburg, are displayed on a screen **1120**. Because the user did not select one of the second user interfaces **1022**, **1032**, **1042**, and **1052**, infor-

mation of all of categories, i.e., tickets, restaurants, traffic, and local news, are displayed on the screen **1120**. In this case, abstracted information regarding the categories may be displayed on a map of a corresponding region.

Alternatively, information of a certain category set by default may be displayed on a screen **1130**. For example, information of "Local News" may be displayed on the screen **1130** by default according to a setting of the user or a device.

When the user selects one of the second user interfaces related to a certain category **1022**, **1032**, **1042**, and **1052**, instead of the first user interface **1010**, information of only the selected category is displayed on a subsequent screen.

For example, when the user selects the second user interface **1022** related to "Tickets", a screen for selecting concerts, sports games, exhibitions, movies, etc., in the corresponding region is displayed. If the user selects one category from among concerts, sports games, exhibitions, and movies, detailed information related to tickets of the selected category will be displayed on the subsequent screen.

Likewise, when the user selects the second user interface **1032** related to "Local News", abstracted information of one or more news in the corresponding region is displayed on the screen. If the user selects one of the news based on the abstracted information, the whole selected news will be displayed on the subsequent screen.

Further, when the user selects the second user interface **1042** related to "Restaurants", abstracted information of restaurants in the corresponding region is displayed on the screen. If the user selects one of the restaurants based on the abstracted information, detailed information including a location and a phone number of the selected place is displayed on the subsequent screen. In this case, reviews of people who have previously visited the selected place may also be displayed. Furthermore, a user interface for making a phone call to the selected place and a user interface for viewing a map of the selected place may also be displayed together with the detailed information.

When the user selects the second user interface **1052** related to "Traffic", traffic information may be displayed on the map of the corresponding region.

FIG. **12** illustrates a user interface related to a certain time, according to an embodiment of the present invention.

Referring to FIG. **12**, a first user interface **1210** may be the user interface related to the certain time. If the certain time desired by a user to continuously receive related information is a parent element, the child elements may be categories of information related to the certain time. In FIG. **12**, the categories of information related to the certain time are Tickets, Movies, Weather, TV Electronic Program Guide (EPG), and Alarm. Tickets is a category of information regarding tickets for concerts, sports games, exhibitions, etc., available at the certain time input by the user, Movies is a category of information regarding movies available at the certain time, TV EPG is a category of information regarding TV programs broadcast at the certain time, Weather is a category of information regarding weather at the certain time, and Alarm is a category related to an alarm setting at the certain time.

Accordingly, when the first user interface **1210** is a user interface related to the parent element, i.e., the certain time, a plurality of second user interfaces **1260** related to the child elements, i.e., the categories of information, may be displayed on neighboring zones **1220**, **1230**, **1240**, and **1250** of the first user interface **1210**.

FIG. **13** illustrates screen images when displaying a user interface related to a certain time, according to an embodiment of the present invention.

Referring to FIG. **13**, a first user interface **1210** and a plurality of second user interfaces **1222**, **1232**, **1242**, and **1252** are displayed on a screen **1310**.

When a user selects the first user interface **1210** on the screen **1310**, one or more pieces of information related to the certain time registered by the user are displayed. That is, because the user did not select one of the second user interfaces **1222**, **1232**, **1242**, and **1252**, information of all categories are displayed on a screen **1320**. For example, Tickets, Movies, TV programs, Weather, etc., at the certain time are displayed on the screen **1320**.

When the user selects one of the second user interfaces related to a certain category **1222**, **1232**, **1242**, and **1252**, instead of the first user interface **1210**, information of only the selected category is displayed on a subsequent screen.

For example, if the user selects the second user interface **1222** related to Tickets, abstracted information of concerts, sports games, and exhibitions starting at the certain time will be displayed on the subsequent screen. If the user selects one item from among the concerts, sports games, and exhibitions based on the abstracted information, detailed information of the selected item will be displayed on the subsequent screen. In order to allow the user to check a place for the selected concert, sports games, and exhibition, a user interface related to a map may also be displayed together with the detailed information.

If the user selects the second user interface **1232** related to Movies, abstracted information of movies starting at the certain time is displayed on the subsequent screen. Thereafter, if the user selects one movie based on the abstracted information, detailed information of the selected movie will be displayed on the subsequent screen. As in the second user interface **1222** related to Tickets, in order to allow the user to check a theater for the selected movie, a user interface related to a map may also be displayed together with the detailed information.

If the user selects the second user interface **1242** related to Weather, weather information at the certain time will be displayed on the subsequent screen. Because weather may change according to time zones, weather information at the certain time registered by the user is displayed on the subsequent screen.

If the user selects the second user interface **1252** related to TV EPG, abstracted information of TV programs starting at the certain time is displayed on the subsequent screen. If the user selects one TV program based on the abstracted information, detailed information of the selected TV program will be displayed on the subsequent screen. In order to remind the user about the start of the selected TV program, a user interface for setting an alarm at a start time of the selected TV program may also be displayed together with the detailed information.

FIG. **14**A illustrates a user interface related to association between devices, according to an embodiment of the present invention.

Referring to FIG. **14**A, a first user interface **1410** is related to the association between the devices. Because the association between the devices is a parent element, the types of the association between devices, e.g., Music share, Photo share, Date History, Vibe message, Wishlist, Scheduler, D-day, and Distance Ruler, may be the child elements. Music share indicates sharing music files between devices, Photo share indicates sharing photos between devices, Date History indicates recording times and locations when

devices are located within a certain distance, Vibe Message indicates transmission of a vibe message, Wishlist indicates sharing a list of desired items, Scheduler indicates sharing schedules, Distance Ruler indicates a distance and a direction between devices, and D-day indicates a count from or to a certain date.

Accordingly, if the first user interface **1410** is a user interface related to the parent element, i.e., the association between the devices, a plurality of second user interfaces **1460** related to the child elements, i.e., the types of the association, may be displayed on neighboring zones **1420**, **1430**, **1440**, and **1450** of the first user interface **1410**.

FIG. **14**B illustrates a method of sharing data between devices, according to an embodiment of the present invention.

Referring to FIG. **14**B, association between devices based on the user interface illustrated in FIG. **14**A may be performed based on a location and a time. For example, users of two devices, e.g., a device A **1470** and a device B **1472**, perform a certain action **1480** on the device A **1470** and the device B **1472** in order to share data. The device A **1470** and the device B **1472** may bump against each other or may be shaken in a certain direction. Motions of the device A **1470** and the device B **1472** may be sensed by using gravity sensors included in the device A **1470** and the device B **1472**.

If the certain action **1480** is performed by the users, the device A **1470** and the device B **1472** transmit action information to a server **1474**. When the action information is transmitted, the device A **1470** and the device B **1472** also transmit location information and action generation time information. The server **1474** determines whether the device A **1470** and the device B **1472** satisfy a condition for sharing data with each other, based on the received action information, the location information, and the action generation time information. If the device A **1470** and the device B **1472** perform the same action, are located in a close distance, and perform the action at the same time, the server **1474** may determine that the condition for sharing data is satisfied. If the condition for sharing data is satisfied, the server **1474** may receive data from the device A **1470** to transmit the received data to the device B **1472**, and may receive data from the device B **1472** to transmit the received data to the device A **1470**.

FIG. **15**A illustrates screen images when displaying a user interface related to association between devices, according to an embodiment of the present invention.

Referring to FIG. **15**A, a first user interface **1410** and a plurality of second user interfaces **1422**, **1432**, **1442**, and **1452** are displayed on a screen **1510**.

If a user selects the first user interface **1410** on the screen **1510**, one or more pieces of abstracted information related to the association between the devices are displayed. Again, because the user did not select one of the second user interfaces **1422**, **1432**, **1442**, and **1452**, abstracted information related to all previous associations between the devices regardless of types of the association is displayed on a screen **1520**. Further, if a user selects the first user interface **1410** on the screen **1510**, menus for connecting with the specific user are displayed. The menus may include a call, a video call, a Short Message Service (SMS), and a Multimedia Messaging Service (MMS).

If the user selects one of the second user interfaces **1422**, **1432**, **1442**, and **1452** related to a certain category respectively, instead of the first user interface **1410**, information of only the selected category will be displayed on a subsequent screen.

For example, if the user selects the second user interface **1422** related to Music share, a list of music files previously shared with other devices is displayed on the subsequent screen. A user interface for adding music files to be shared may also be displayed on the subsequent screen together with the list of the music files. If the user selects one of the music files on the list, the selected music file is reproduced and a user interface for controlling the reproduction of the music file is displayed on the subsequent screen. Furthermore, a user interface for streaming the music file in real time may also be displayed on the subsequent screen.

If the user selects the second user interface **1432** related to Photo share, a list of photo files previously shared with other devices is displayed on the subsequent screen. A user interface for adding photo files to be shared may also be displayed on the subsequent screen together with the list of the photo files. If the user selects one of the photo files on the list, the selected photo file is magnified and displayed on the subsequent screen.

If the user selects the second user interface **1442** related to Vibe Message, a user interface for transmitting a vibe message to another device is displayed on the subsequent screen. The vibe message may be transmitted by adjusting the intensity and length of vibration according to a rhythm set in advance or arbitrarily set by the user.

FIG. **15**B is a diagram illustrating a method of transceiving a vibe message, according to an embodiment of the present invention.

Referring to FIG. **15**B, if a user of a transmission device **1530** selects the second user interface **1442** for transceiving the vibe message on the screen **1510**, the vibe message is transmitted to a reception device **1532** by adjusting the intensity and length of vibration.

If the vibe message is transceived via an Internet protocol (IP) network (for example, the vibe message is transmitted via a Wireless Local Area Network (WLAN)), the transmission device **1530** transmits the vibe message to the push server **1534** via a WLAN module. Information for identifying the reception device **1532** (for example, an IP address or a Personal Identification Number (PIN) of the reception device **1532**) may also be transmitted to the push server **1534** together with the vibe message in order to allow the push server **1534** to accurately transmit the vibe message to the transmission device **1530**. The push server **1534** may transmit the vibe message received from the transmission device **1530**, to the reception device **1532**, using a push method. A network between the transmission device **1530** and the push server **1534**, and between the push server **1534** and the reception device **1532** is not necessarily an IP network, and may be a cell-based circuit switch network such as a Code Division Multiple Access (CDMA) network, a Global System for Mobile communications (GSM) network, or a Wideband CDMA (WCDMA) network.

If the transmission device **1530** and the reception device **1532** are sufficiently close to each other and thus, the push server **1534** is not required, the vibe message may be directly transmitted by using Near Field Communication (NFC) technology such as Bluetooth®, Zigbee®, or Radio Frequency IDentification (RFID).

Referring back to FIG. **15**A, if the user selects the second user interface **1452** related to Date History, a list of times when a device of the user has been located within a certain distance from other devices is displayed. A user interface for sorting the times on the list according to date and a user interface for sorting places where the device has been located within the certain distance from other devices may also be displayed on the subsequent screen.

FIG. **15**C is a diagram illustrating a method of providing a date history service, according to an embodiment of the present invention.

Referring to FIG. **15**C, a device A **1540** and a device B **1542** periodically transmit their location information to a main server **1544** so as to allow the main server **1544** to continuously trace the locations of device A **1540** and the device B **1542**. The device A **1540** and the device B **1542** generate the location information, e.g., by using Global Positioning System (GPS) modules included in the device A **1540** and the device B **1542**, and periodically transmit the generated location information to the main server **1544**.

The main server **1544** determines the distance between the device A **1540** and the device B **1542** based on the location information received from the device A **1540** and the device B **1542**, and stores in a DataBase (DB) server **1548** times and locations when the device A **1540** and the device B **1542** are located within the certain distance.

If the user of the device A **1540** or the device B **1542** selects the second user interface **1452** related to Date History on the user interface illustrated in FIG. **15**A, the device A **1540** or the device B **1542** requests information regarding the times and the places when the device A **1540** and the device B **1542** are located within the certain distance from the DB server **1548**, and the DB server **1548** transmits the information to the device A **1540** or the device B **1542** in response to the request.

FIG. **16** illustrates a user interface related to a favorite widget setting, according to an embodiment of the present invention.

Referring to FIG. **16**, a first user interface **1610** is related to a favorite widget setting. If the favorite widget setting is a parent element, a plurality of widgets favored by a user may be child elements. Accordingly, the first user interface **1610** is a user interface related to the parent element, i.e., the favorite widget setting, the widgets favored by the user from among a plurality of widgets included in widget storage **1660** may be displayed on neighboring zones **1620**, **1630**, **1640**, and **1650** of the first user interface **1610**.

FIG. **17** illustrates screen images when displaying a user interface related to a favorite widget setting, according to an embodiment of the present invention.

Referring to FIG. **17**, a first user interface **1610** and a plurality of second user interfaces **1622**, **1632**, **1642**, and **1652** are displayed on a screen **1710**.

If a user selects the first user interface **1710** on the screen **1610**, a user interface for setting favorite widgets is displayed on a screen **1720**. A user interface for selecting one or more widgets to be displayed as the second user interfaces **1622**, **1632**, **1642**, and **1652** on neighboring zones of the first user interface **1610** is displayed.

FIG. **18** is a flowchart illustrating a method of providing a user interface, according to an embodiment of the present invention.

Referring to FIG. **18**, in step **1810**, an apparatus for providing a user interface displays a first user interface related to a parent element including a plurality of child elements. A user interface, e.g., related to a keyword, a name of a region, a certain time, association between devices, or a favorite widget setting in which a user interested, is displayed.

If the displayed first user interface is selected in step **1810**, in step **1820**, the apparatus displays a plurality of second user interfaces related to the child elements on neighboring zones of the first user interface. As illustrated in FIGS. **4**A to **4**C, the first and second user interfaces can be displayed in a number of configurations.

FIG. **19** is a block diagram illustrating an apparatus for providing a user interface, according to an embodiment of the present invention.

Referring to FIG. **19**, the apparatus **1900** includes a control unit **1910**, a communication unit **1920**, and a display unit **1930**.

The control unit **1910** generates a first user interface related to a parent element and a plurality of second user interfaces related to child elements. If a user interface displayed on a screen includes information received from an external server or device via the communication unit **1920**, the first user interface and the second user interfaces are generated by using the received information.

After the first user interface related to the parent element is generated, if a user selects the first user interface, the second user interfaces are generated on neighboring zones of the first user interface.

The communication unit **1920** receives from the external server or device information required to generate the first user interface and the second user interfaces.

The display unit **1930** displays the first user interface and the second user interfaces by the control of the control unit **1910**. If the first user interface generated by the control unit **1910** is displayed and selected and thus the control unit **1910** generates the second user interfaces on the neighboring zones of the first user interface, the first user interface and the second user interfaces are displayed.

According to the above-described embodiments of the present invention, a user may intuitively view and select one of a user interface related to a parent element and a plurality of user interfaces related to child elements, which are displayed on a screen, and thus, may easily and rapidly access desired information or a desired service.

Further, if a central widget displayed on a screen is selected, a plurality of peripheral widgets related to the central widget may be provided, and the peripheral widgets may receive from content providers various contents related to the central widget. As such, a user may simultaneously access a plurality of content providers to receive contents related to a certain item.

Certain embodiments of the present invention can also be embodied as computer-readable codes on a computer-readable recording medium. The computer-readable recording medium is any data storage device that can store data, which can be thereafter read by a computer system.

For example, the apparatus **1900** illustrated in FIG. **19** may include a bus connected to every unit of the apparatus **1900**, at least one processor connected to the bus, and memory connected to the bus so as to store commands, receive messages, or generate messages and connected to the processor for executing the commands.

Examples of the computer-readable recording medium include Read-Only Memory (ROM), Random-Access Memory (RAM), CD-ROMs, magnetic tapes, floppy disks, and optical data storage devices. The computer-readable recording medium can also be distributed over network-coupled computer systems so that the computer-readable code is stored and executed in a distributed fashion.

While the present invention has been particularly shown and described with reference to certain embodiments thereof, it will be understood by one of ordinary skill in the art that various changes in form and details may be made therein without departing from the spirit and scope of the present invention as defined by the following claims and their equivalents.

What is claimed is:

1. A method for providing a user interface, at a first device, the method comprising:

generating specific user interfaces dedicated to a second device, wherein the specific user interfaces comprise a first user interface corresponding to the second device, and a plurality of second user interfaces, each of the second user interfaces corresponding to a different category of content dedicated to the second device;

displaying the specific user interfaces associated with the second device;

receiving a selection of one user interface corresponding to a selected category of content from among the specific user interfaces;

displaying, according to the selection, a sharing list of, from among content sharable between the first device and the second device, content corresponding to the selected category; and

displaying, when one of a plurality of functions on the displayed sharing list is selected, a user interface for performing the selected function.

2. The method of claim 1, wherein the sharing list comprises a communication function list and data sharing list,

the communication function list comprises functions of at least one of making a phone call, making a video call, and sending a text message to the second device,

the data sharing list comprises functions of at least one of sharing music, photo, data history, vibe message, wish list, scheduler, D-day, and distance ruler between the first device and the second device.

3. The method of claim 1, wherein the first user interface is represented as an image related to the second device.

4. An apparatus for providing a user interface, the apparatus comprising:

a communication unit configured to communicate with a specific device;

a control unit configured to generate specific user interfaces dedicated to the specific device, wherein the specific user interfaces comprise a first user interface corresponding to the specific device, and a plurality of second user interfaces, each of the second user interfaces corresponding to a different category of content dedicated to the specific device; and

a display unit configured to display the specific user interfaces, and display, when a selection of one user interface corresponding to a selected category of content from among the specific user interfaces is received, a sharing list of, from among content sharable between the apparatus and the specific device, content corresponding to the selected category,

when one of a plurality of functions on the displayed sharing list is selected, the display unit is further configured to display a user interface for performing the selected function.

5. The apparatus of claim 4, wherein the sharing list comprises a communication function list and data sharing list,

the communication function list comprises functions of at least one of making a phone call, making a video call, and sending a text message to the specific device,

the data sharing list comprises functions of at least one of sharing music, photo, data history, vibe message, wish list, scheduler, D-day, and distance ruler between the apparatus and the specific device.

6. The apparatus of claim 4, wherein the first user interface is represented as an image related to the specific device.

7. The method of claim 1, wherein the displaying the sharing list between the first device and the second device:

displaying information related to a history with respect to a category corresponding to the selection.

8. The apparatus of claim 4, wherein the display unit displays information related to a history with respect to a category corresponding to the selection.

9. The method of claim 1, wherein displaying the specific user interfaces associated with the second device comprises displaying at least one indicator on each of the second user interfaces, wherein the at least one indicator indicates an abstract of content corresponding to each of the second user interfaces.

10. The apparatus of claim 4, wherein the display unit is further configured to display at least one indicator on each of the second user interfaces, wherein the at least one indicator indicates an abstract of content corresponding to each of the second user interfaces.

* * * * *